WELDPARTS USA

SPOT WELDING EQUIPMENT

PRODUCT CATALOG

Robotic welding guns 02
Gun bodies, drives, transformer and controller

Portable welding guns 09
X-type and C-type models

RIP systems 10
Cooling-water monitoring and connection diagrams



X-type robotic welding gun body

Welding gun body assembly(X type)

- Universal gun body, no distinction between left and right
- The gun frame is spliced by screws, which is easy to disassemble and maintain. It is highly flexible to connect with the robot. It can be interchanged up, down, left, right, and rear to meet the needs of different orientations.
- The welding gun reserves the access point of the adaptive voltage sampling line, which can be matched with many welding gun controllers
- Fully interchangeable with hollow one-piece drive and coupling drive guns
- The standardized gun body shortens the delivery cycle of all components, shortens the spare parts procurement cycle



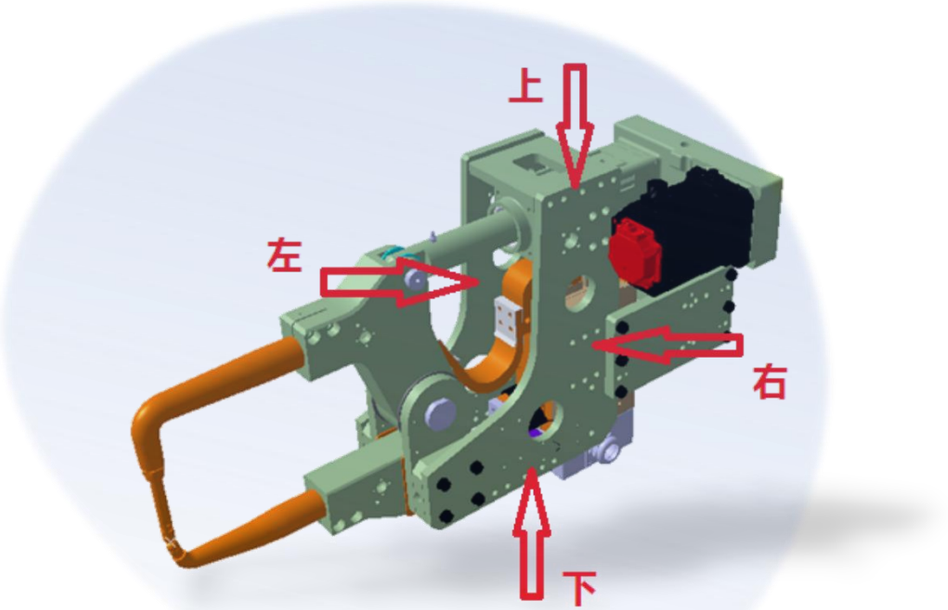

C-type robotic welding gun body

Welding gun body assembly(C type)

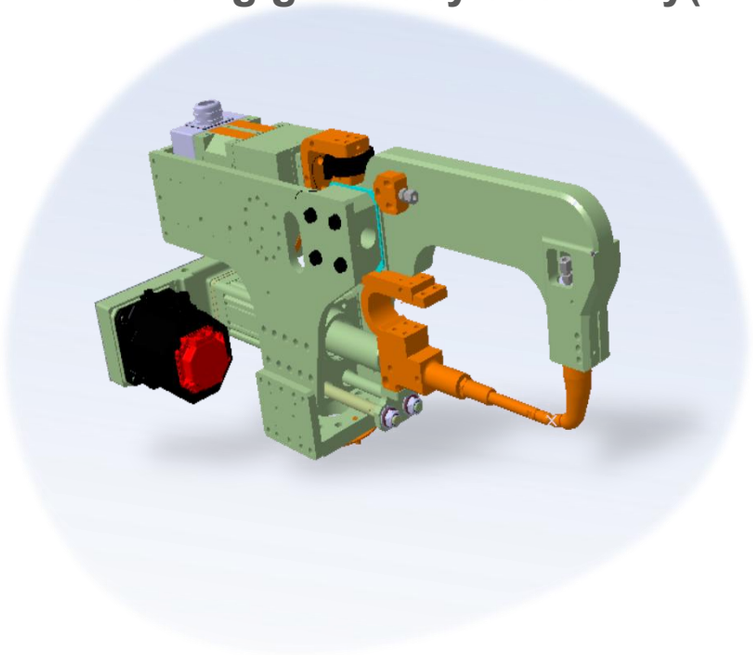

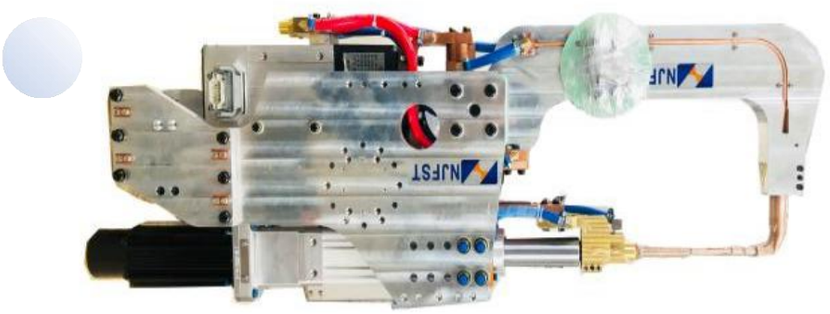

- The consumable parts of the soft connection can be shared, which can reduce the inventory of consumables and reduce costs.
- The interface of the gun replacement bracket is reserved in the design. When the gun needs to be changed, only the parts of the gun replacement bracket can be added to complete the installation, avoiding the cumbersome process of returning to the factory for processing and transformation, and saving the reconstruction cycle.
- More than 80% of the parts of the welding gun body are common, and only need to purchase the required modified parts according to the requirements to achieve the purpose of repeated use.
- The net weight of the welding gun is 55-70 kg (excluding transformer and servo motor), and the modular gun body can be matched with transformers of various brands.
- The weight of the lightweight transformer independently developed by FST can reach about 70 kg. Compatible to 80 kg robot.

Drive Assembly of Robotic Welding Gun

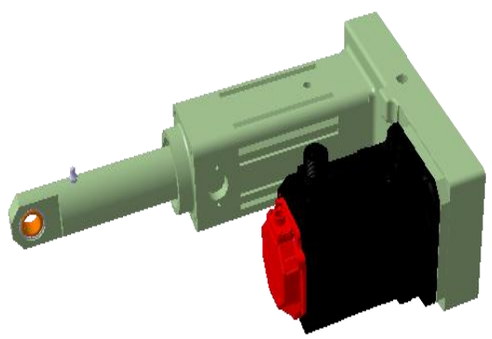

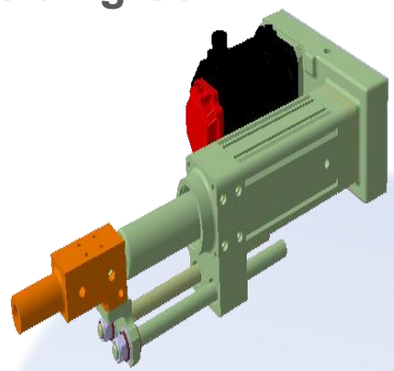

DRIVE	Design Pressure	Regular Distance	Lead Distance (THK Lead Screw)	Speed	Throat Depth (Standard)
X-type	20000N	132/162mm	5mm	780mm/s	860mm
C-type	16000N	180mm	20mm	890mm/s	800mm

- The drive assembly parts are made of aluminum profiles and CNC forming, with higher precision
- With self-lubricating bearings and using self-lubricating carbon powder, the maximum maintenance period can reach 3 months

Portable Transformer

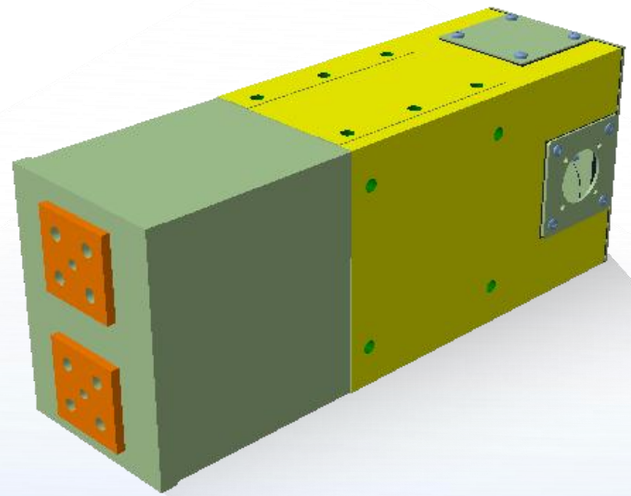

Transformer Parameters Compared with international well-known brands

Brand	Power	Duty Cycle	Continious Current	Max Short Current	Weight
Bosch	170KVA	20%	8.9KA	36000A	20kg
Nadex	79KVA	10%	6.4KA	18000A	11kg
FST	**170KVA**	**20%**	**8.9KA**	**36000A**	**20kg**

Aluminium Welding Gun

- Learn from European, American and Japanese technology, independently develop and manufacture
- The pressure of the welding gun is 800kgf
- 260 KVA/20% duty cycle，Secondary maximum short-circuit current is 50000A；
- Double transformers connected in parallel, lighter in weight, higher in current, unified with conventional welding gun spare parts;
- Diode service life is 48000000 times，which is 30% higher than that of similar products；
- The secondary connection block has low contact resistance and long service life；
- Lightweight, the overall weight of the welding gun is 150kg;
- Adopt variable frequency process, 1000 Hz to 5000 Hz adjustable, better quality of welding joints

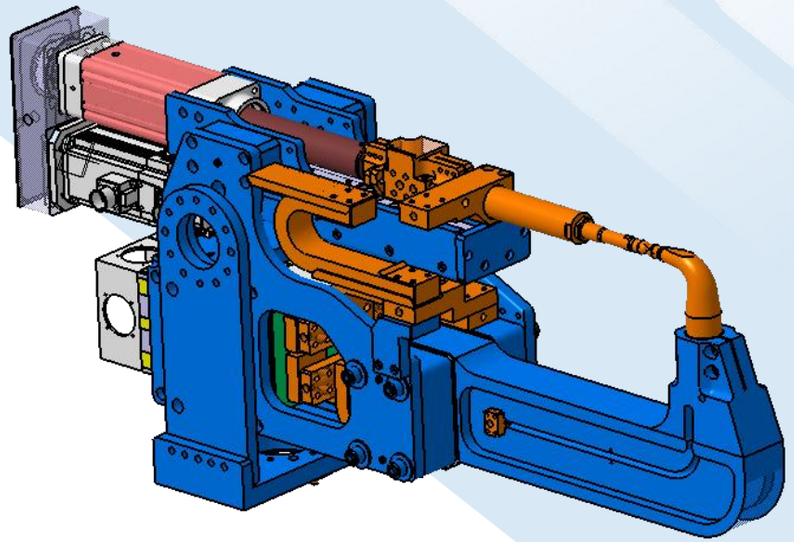

Robotic welding gun throat depth

Throat Depth Range

	Small-sized	Medium-sized	Large-sized	Special
	~200	200~500	500~800	800~
C	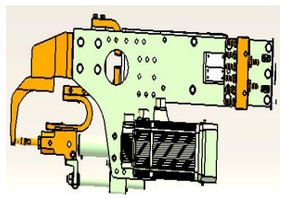	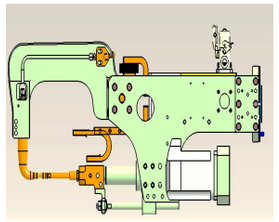	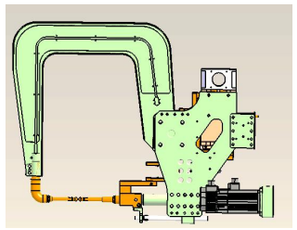	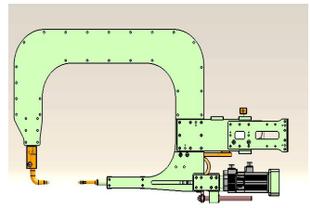
X	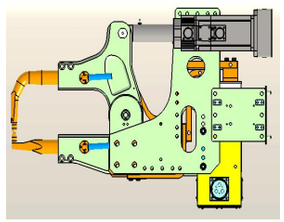	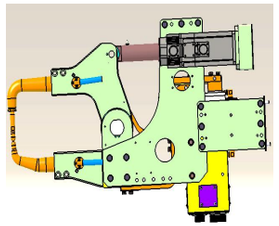	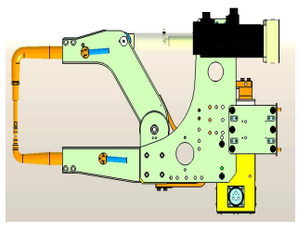	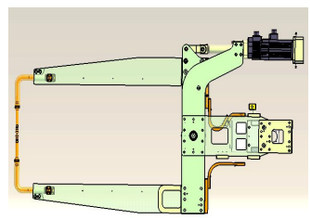
	~200	200~500	500~800	800~
	Small-sized	Medium-sized	Large-sized	Special

Robotic welding gun controller

Specifications

- **Specially designed** for robotic welding gun
- **Energy saving:** Three-phase power input, using full-bridge uncontrolled rectifier, high operating frequency, small transformer loss, significant energy saving effect
- **Special materials:** Can be used for welding aluminum, galvanized metal and other special materials with good welding results.
- **Communication Protocol:** DIO, DeviceNet, ProfiNet, ProfiBus, CC-Link
- **Cooling method:** Air Cooling or Water Cooling
- **Samll size:** 650×550×730mm

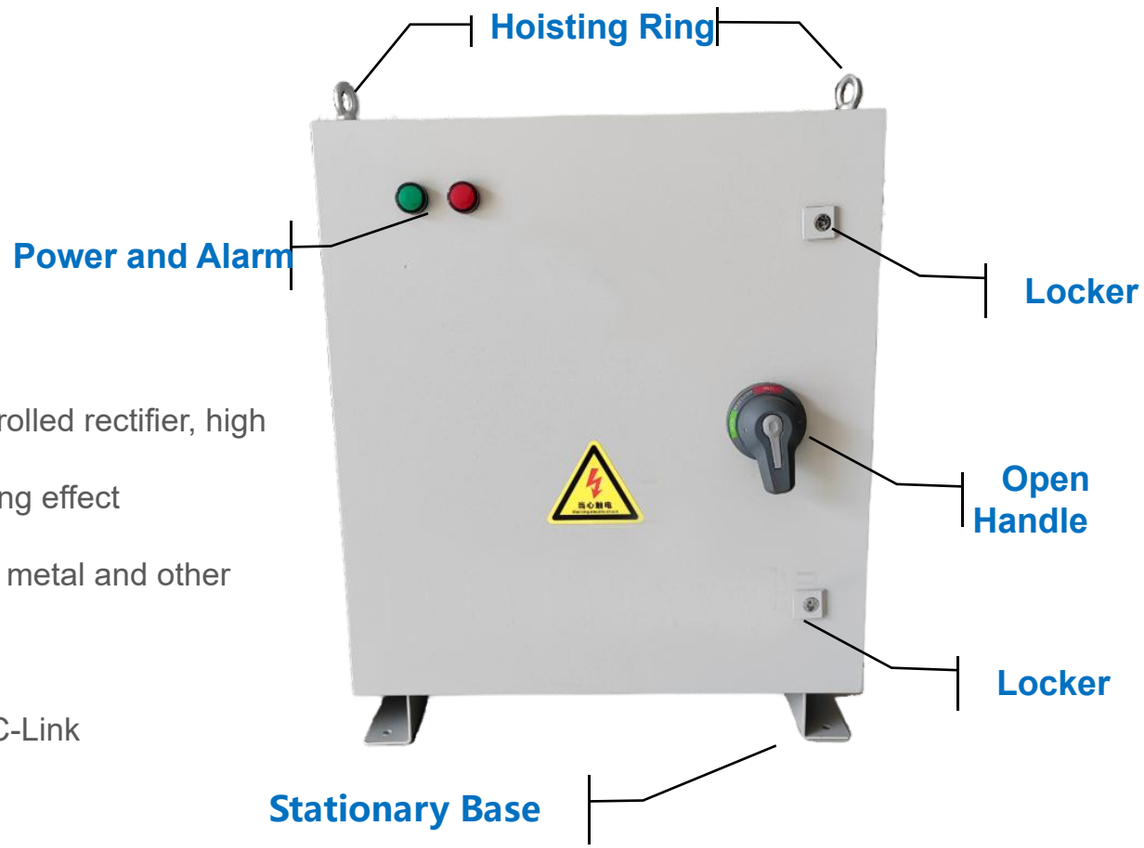

Portable welding gun models



Portable Welding Gun
X Type



Portable Welding Gun
C Type

Models Item	XY2-35X	XY2-35C	XY2-45X	XY2-45C	XY2-65X	XY2-65C
Power at 50%	35	35	45	45	65	65
Maximum short circuit current	18	18	20	20	22	22
Secondary unload voltage	5.7	5.7	6.3	6.3	8	8
Voltage at50Hz/60HzV	380	380	380	380	380	380
Distance between the arms	120-280	100	120-330	100	160-430	100
Max.strength at electrodes N	3500	3500	3500	3500	3500	3500
Working stroke	15-45	15-25	15-45	15-25	15-45	15-25
Max.stroke	50-120	60/100/140	50-120	60/100/140	50-120	60/100/140
Arm length	240-600	200-500	300-800	200-500	400-1100	200-500
Compressed Air supply MPa	0.5	0.5	0.5	0.5	0.5	0.5
Max.thickness of mild steelsheet with min.lengths armmm	3+3	3+3	4+4	4 +4	5+5	5+5
With 500mm armsmm	2+2	2+2	3+3	3+3	3+3	3+3
With maximum length arms	1.2+2	1.2+1.2	2+2	1.8+1.8	2.0+2.0	2.0+2.0
Cross wire maximummm	14+14	14+14	16+16	16+16	20+20	20+20
Cooling water pressure dropMPa	0.05	0.05	0.05	0.05	0.05	0.05
Cooling water flow /min	12	12	12	12	12	12

RIP system types

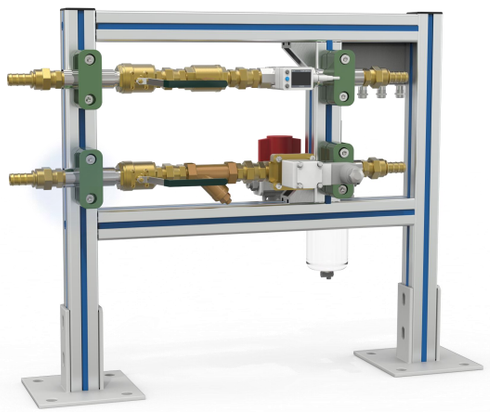

RIP-Standard Type



RIP-Split Immediately break Type

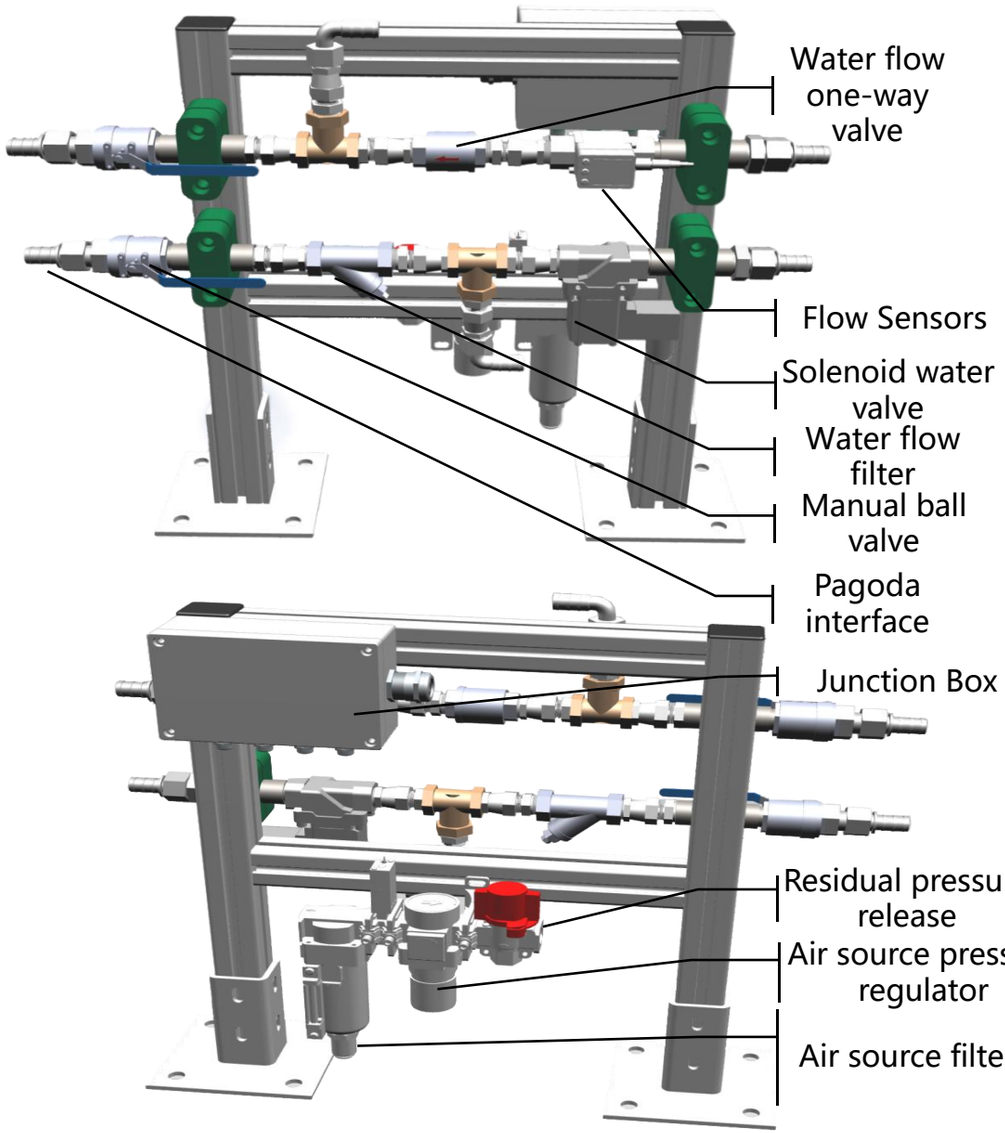

RIP- Standard type

RIP- Standard type is a standard equipment used in cooling water monitoring in the welding field. It can monitor return water flow and intake pressure in real time.

When the return water flow is lower than the alarm value, the flow sensor outputs an alarm signal. This signal can be connected to a PLC or robot, and then the PLC or robot controls the opening or closing of the electromagnetic water valve, ultimately realizing the monitoring of cooling water.

The optional bus communication module makes the device signal network connection more convenient.

Parameter	Description
Measurement	570*200*510 mm
Voltage/Power	1PH 24V(DC) / 30W
Communication protocols	I/O、Profinet、Ethernet/IP、EtherCAT、CC-Link etc.(Optional)
Water pipe diameter	1/2、3/4 (Optional)
Water flow range	0~16L/min、0~40L/min (Optional)
Gas unit	Not equipped, air unit (Optional)
Air pressure range	0~1.0Mpa

RIP standard water connections

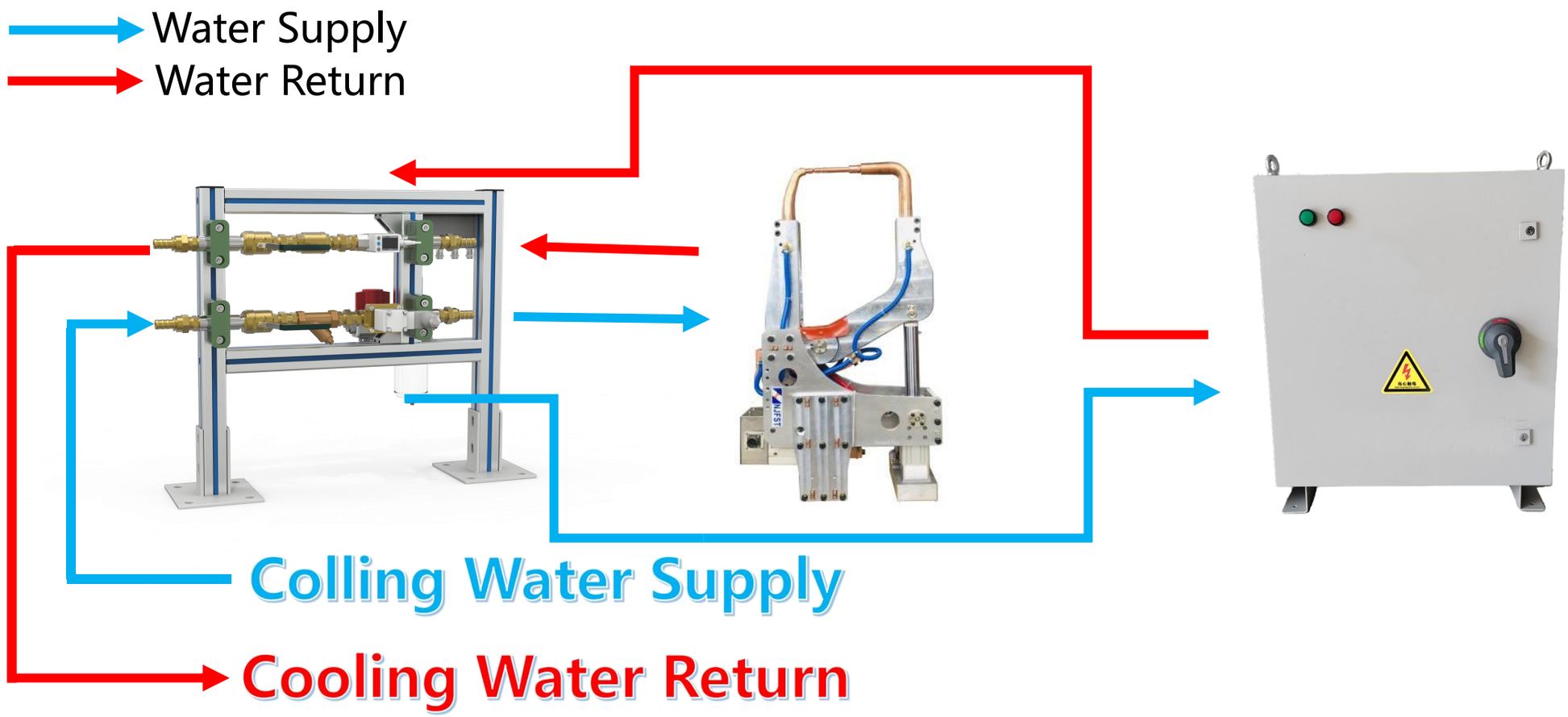

Water Connection Diagram

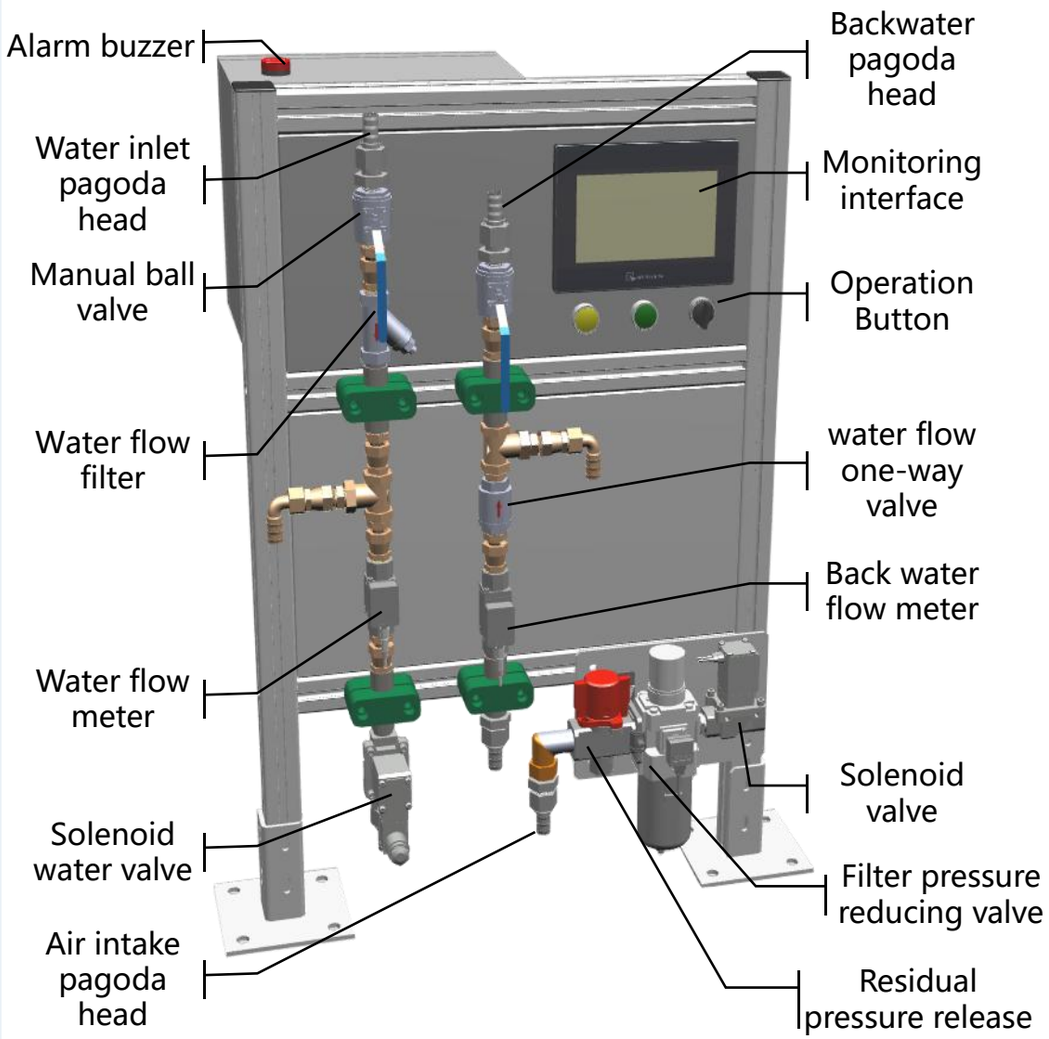

RIP-Split Immediately break Type

RIP-Split Immediately break Type is a standard equipment used in cooling water monitoring in the welding field. It can monitor inlet water flow, back water flow, back water temperature, and intake air pressure in real time.

Compared with the traditional RIP, this equipment can automatically cut off the incoming water flow within 1 to 2 seconds when the electrode cap falls off, cooling water leaks, etc., and at the same time transmits an alarm signal to the PLC or robot to stop the welding process, to avoid damage to the welding gun.

The built-in bus communication module makes the device signal network connection more convenient.

Parameter	Description
Measurement	580*330*870 mm
Voltage/Power	1PH 24V(DC) / 60W
Communication Protocol	I/O、Profinet、Ethernet/IP、EtherCAT、CC-Link (Optional)
Water pipe diameter	1/2、3/4 (Optional)
Water flow range	0~16L/min、0~40L/min (Optional)
Air Unit	Not equipped, air unit, air unit + solenoid valve (optional)
Air pressure range	0~1.0Mpa

RIP split water and air connections

RIP SYSTEM

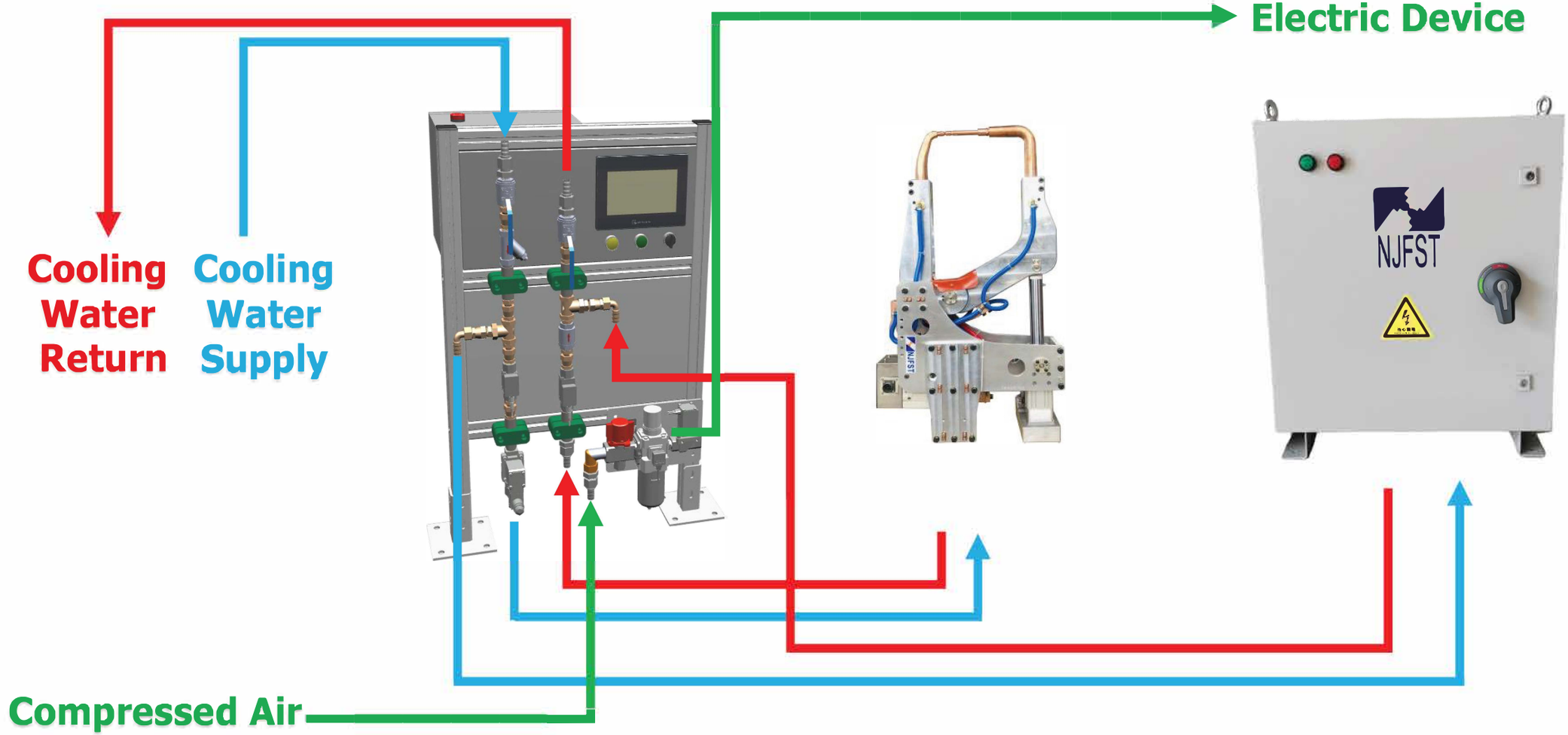

Water/Air Connection Diagram