WELDPARTS USA

MIG WELDING PARTS CATALOG

Contact tips / Nozzles / Adaptors / Diffusers / Torches



CONTACT TIPS



TIP ADAPTORS



NOZZLES



GAS DIFFUSERS

MIG TORCHES

MIG TORCHES



weldparts.com

Contents

Binzel / Panasonic Contact Tips 3

Panasonic / OTC / Tweco Contact Tips 4

Other Contact Tips 5

Binzel Nozzles 8

Panasonic / OTC Nozzles 9

OTC / Tweco Nozzles 10

Binzel Tip Adaptors 11

Panasonic / OTC Tip Adaptors 12

Gas Diffusers / Insulators 14

Panasonic Swan Neck / SAW Tip Holders 15

SAW Tips 16

Torches 19

Binzel / Panasonic Contact Tips

Contact Tip M6 × 25 mm Ecu

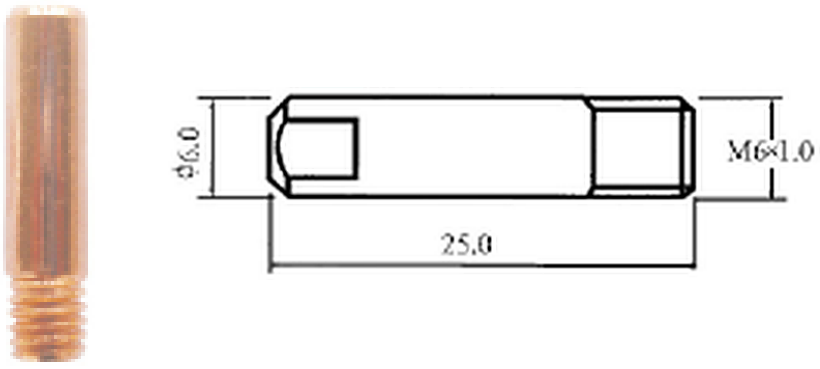

Part Number	Description
140.0008	Contact Tip 0.6mm/.023
140.0059	Contact Tip 0.8mm/.030
140.0177	Contact Tip 0.9mm/.035
140.0253	Contact Tip 1.0mm/.040
140.0387	Contact Tip 1.2mm/.045

Contact Tip M8 × 30 mm CuCrZr

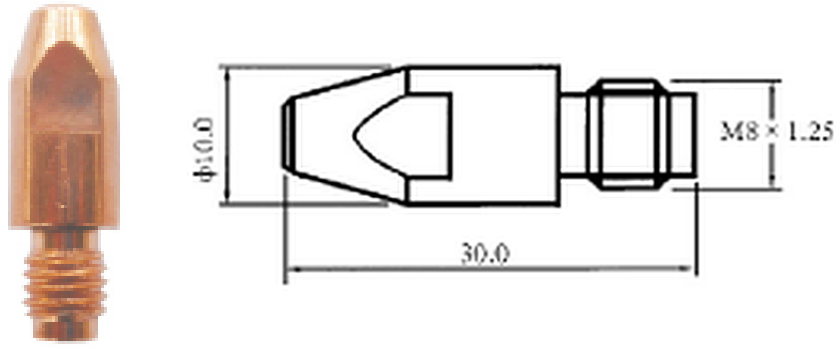

Part Number	Description
140.0114	Contact Tip 0.8mm/.030
140.0214	Contact Tip 0.9mm/.035
140.0313	Contact Tip 1.0mm/.040
140.0442	Contact Tip 1.2mm/.045
140.0533	Contact Tip 1.4mm/.055
140.0587	Contact Tip 1.6mm/1/16
140.0653	Contact Tip 2.0mm/5/64
140.0677	Contact Tip 2.4mm/3/32

Contact Tip M6 × 28 mm Ecu

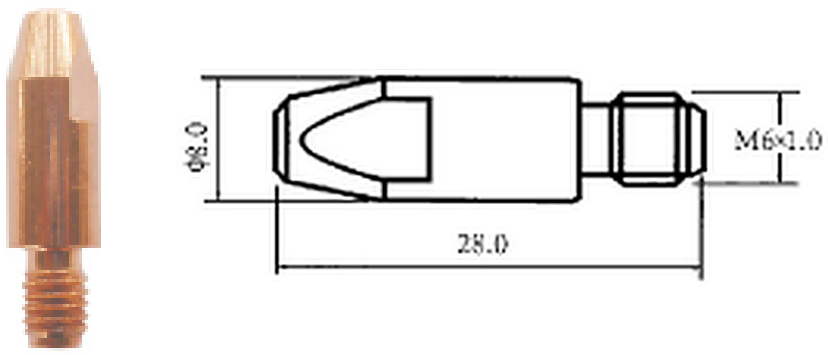

Part Number	Description
140.0005	Contact Tip 0.6mm/.023
140.0051	Contact Tip 0.8mm/.030
140.0169	Contact Tip 0.9mm/.035
140.0242	Contact Tip 1.0mm/.040
140.0379	Contact Tip 1.2mm/.045
140.0516	Contact Tip 1.4mm/.055
140.0555	Contact Tip 1.6mm/1/16

Contact Tip M10 × 35 mm CuCrZr

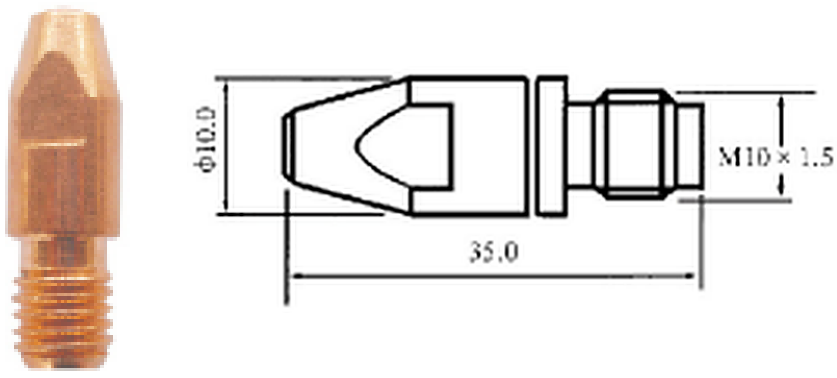

Part Number	Description
140.0117	Contact Tip 0.8mm/.030
140.0316	Contact Tip 1.0mm/.040
140.0445	Contact Tip 1.2mm/.045
140.0590	Contact Tip 1.6mm/1/16
140.0679	Contact Tip 2.4mm/3/32

Contact Tip M8 × 28 mm CuCrZr

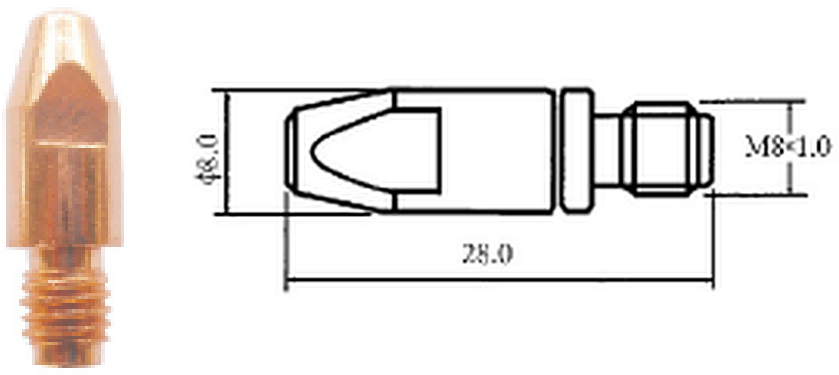

Part Number	Description
140.0054	Contact Tip 0.8mm/.030
140.0172	Contact Tip 0.9mm/.035
140.0245	Contact Tip 1.0mm/.040
140.0382	Contact Tip 1.2mm/.045
140.0558	Contact Tip 1.6mm/1/16

Contact Tip M6 × 40 mm CuCrZr

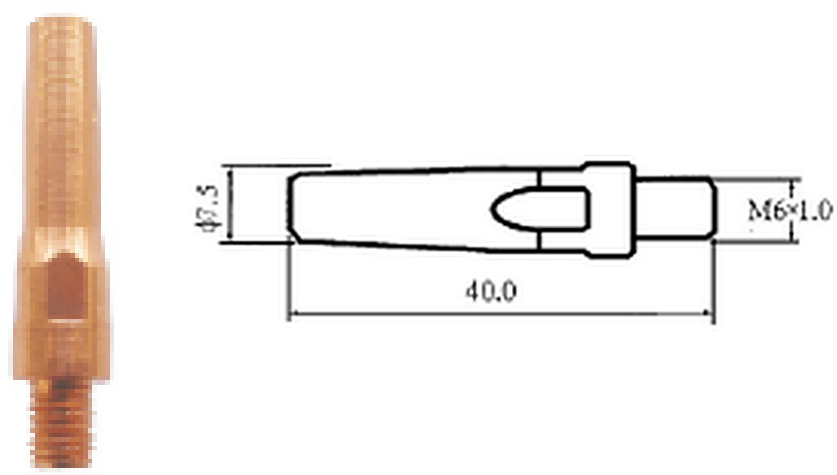

Part Number	Description
J41/0.8	Contact Tip 0.8mm/.030
J41/1.0	Contact Tip 1.0mm/.040
J41/1.2	Contact Tip 1.2mm/.045

Panasonic / OTC / Tweco Contact Tips

Contact Tip M6 × 45 mm CuCrZr

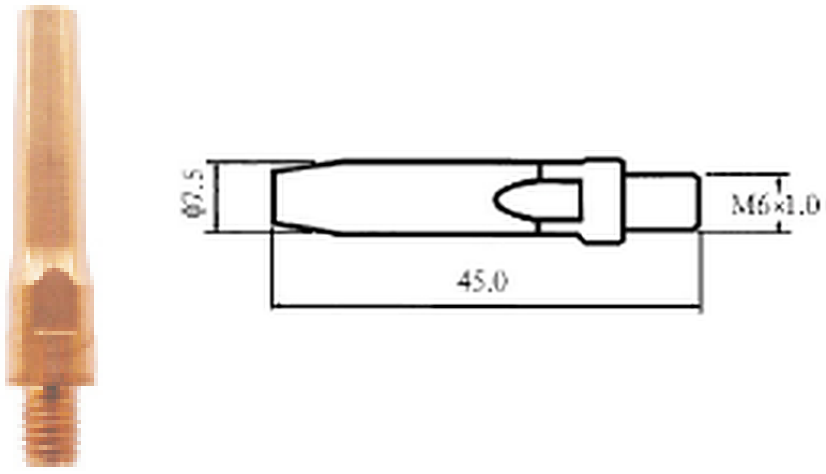

Part Number	Description
J45/0.8	Contact Tip 0.8mm/.030
J45/1.0	Contact Tip 1.0mm/.040
J45/1.2	Contact Tip 1.2mm/.045

Contact Tip 5/6" UNF × 41 mm

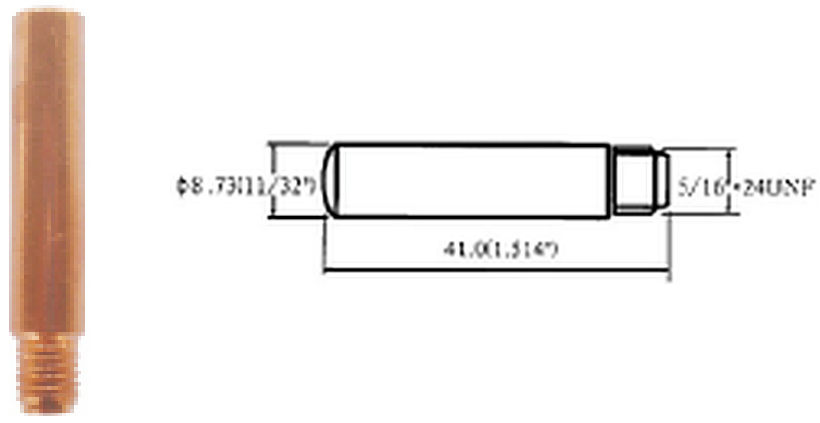

Part Number	Description
15HFC-40	Contact Tip 1.0mm/.040
15HFC-45	Contact Tip 1.2mm/.045
15HFC-116	Contact Tip 1.6mm/1/16
15HFC-564	Contact Tip 2.0mm/5/64

Contact Tip M6 × 40 mm CuCrZr

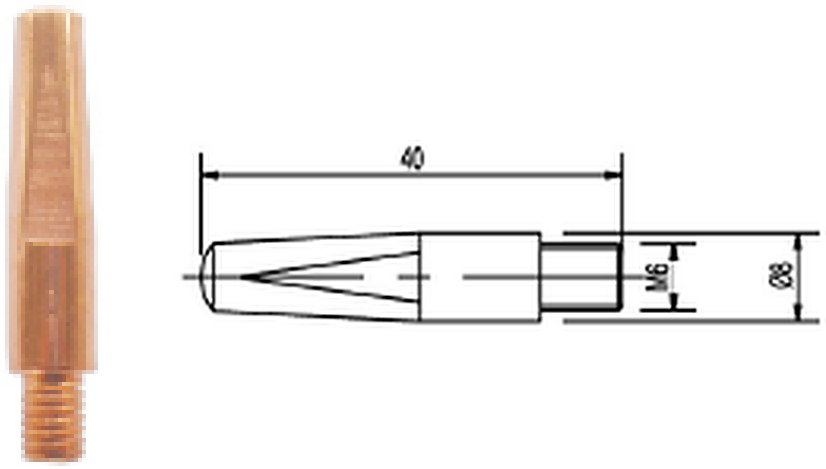

Part Number	Description
J40/0.8	Contact Tip 0.8mm/.030
J40/1.0	Contact Tip 1.0mm/.040
J40/1.2	Contact Tip 1.2mm/.045

Contact Tip 5/16" UNF × 50 mm

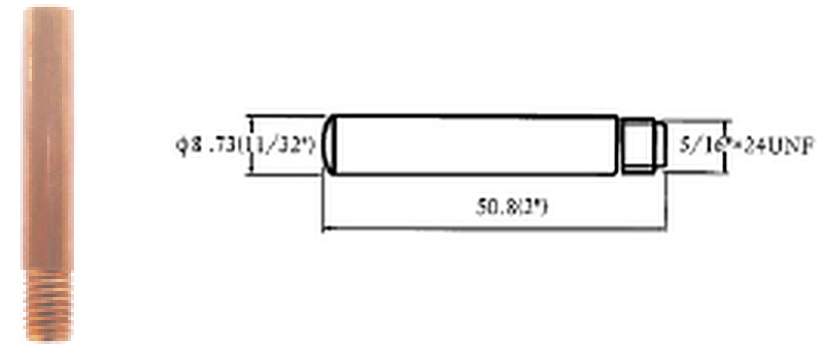

Part Number	Description
14H-40	Contact Tip 1.0mm/.040
14H-45	Contact Tip 1.2mm/.045
14H-52	Contact Tip 1.3mm/.052
14H-116	Contact Tip 1.6mm/1/16
14H-564	Contact Tip 2.0mm/5/64
14H-332	Contact Tip 2.4mm/3/32

Contact Tip M6 × 45 mm CuCrZr

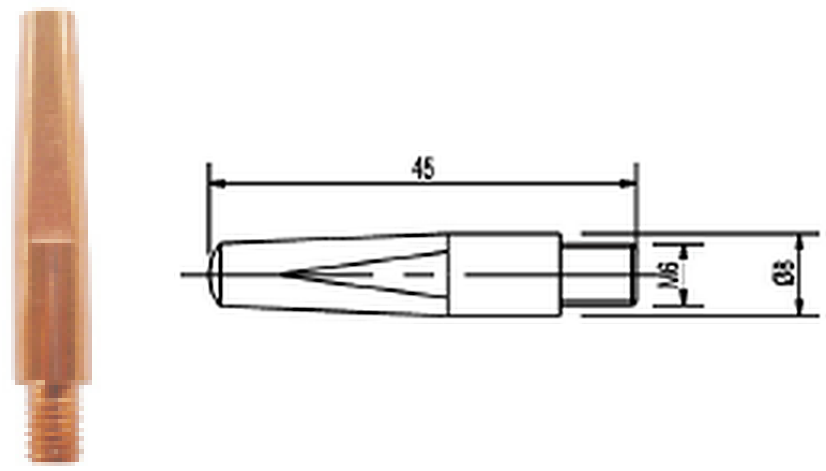

Part Number	Description
J45/0.8	Contact Tip 0.8mm/.030
J45/1.0	Contact Tip 1.0mm/.040
J45/1.2	Contact Tip 1.2mm/.045

Contact Tip 1/4" UNF × 38 mm Ecu

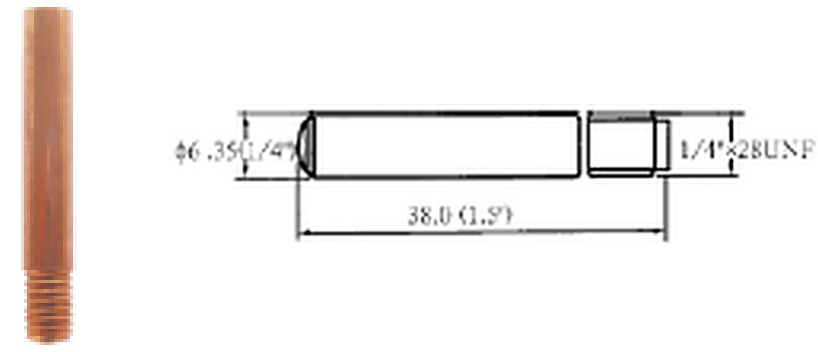

Part Number	Description
14-23	Contact Tip 0.6mm/.023
14-30	Contact Tip 0.8mm/.030
14-35	Contact Tip 0.9mm/.035
14-40	Contact Tip 1.0mm/.040
14-45	Contact Tip 1.2mm/.045
14-52	Contact Tip 1.3mm/.052
14-116	Contact Tip 1.6mm/1/16

Other Contact Tips

Contact Tip 11.5 × 45 mm

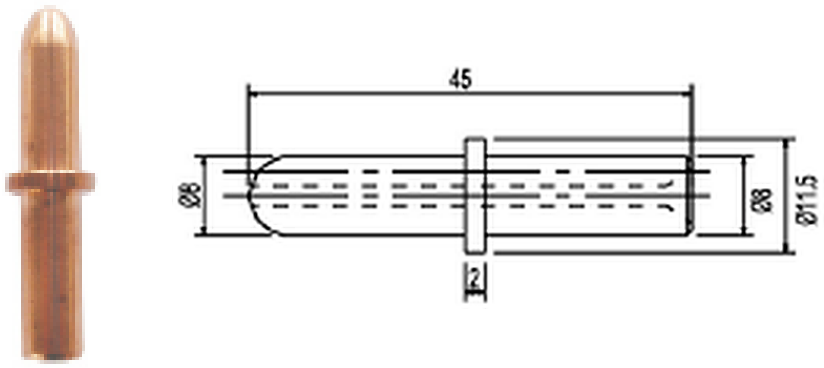

Part Number	Description
D115-4501	Contact Tip 1.2mm/.01
D115-4502	Contact Tip 1.4mm/.02
D115-4503	Contact Tip 1.6mm/.03
D115-4504	Contact Tip 1.8mm/.04
D115-4505	Contact Tip 2.0mm/.05

Contact Tip 1/4" UNF × 38 mm

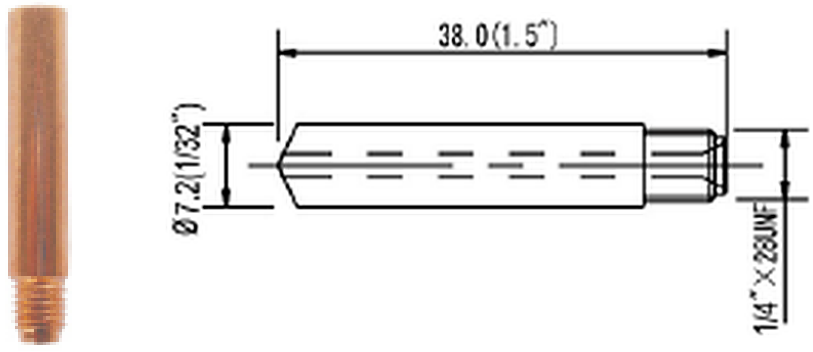

Part Number	Description
14H-30	Contact Tip 0.8mm/.030
14H-35	Contact Tip 0.9mm/.035
14H-40	Contact Tip 1.0mm/.040
14H-45	Contact Tip 1.2mm/.045
14H-52	Contact Tip 1.3mm/.052
14H-116	Contact Tip 1.6mm/1/16
14H-564	Contact Tip 2.0mm/5/64

Contact Tip M6 × 40 (45) CuCrZr

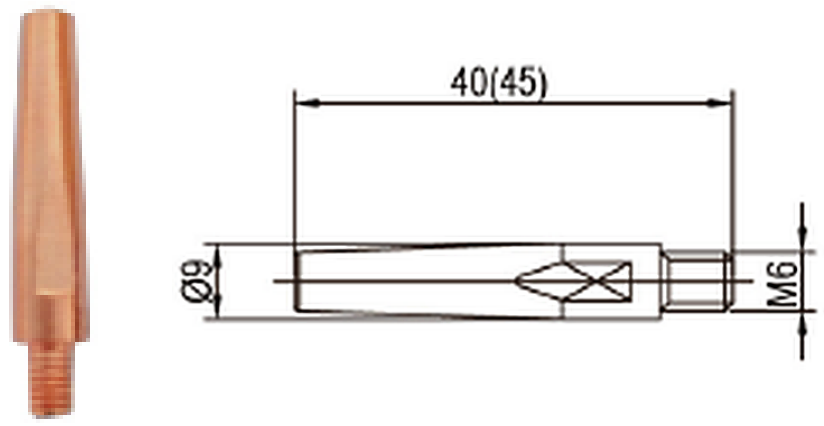

Part Number	Description
Z40 (45) /0.8	Contact Tip 0.8mm/.030
Z40 (45) /0.9	Contact Tip 0.9mm/.035
Z40 (45) /1.0	Contact Tip 1.0mm/.040
Z40 (45) /1.2	Contact Tip 1.2mm/.045

Contact Tip DJO40 (45) CuCrZr

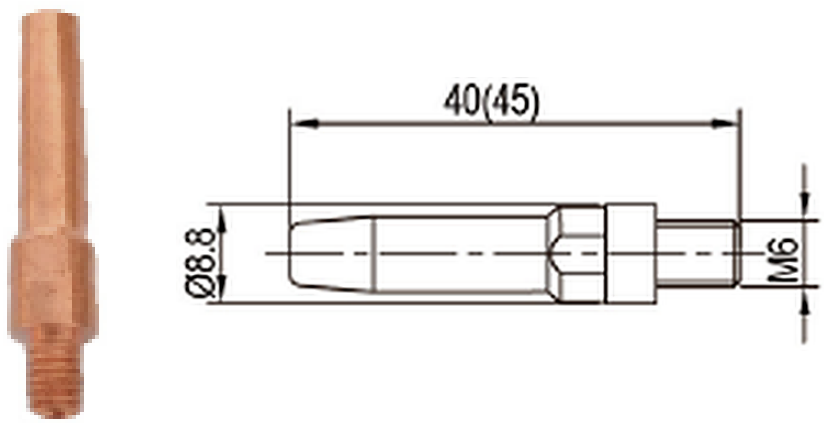

Part Number	Description
Z40 (45) /0.8	Contact Tip 0.8mm/.030
Z40 (45) /0.9	Contact Tip 0.9mm/.035
Z40 (45) /1.0	Contact Tip 1.0mm/.040
Z40 (45) /1.2	Contact Tip 1.2mm/.045

Contact Tip S8 × 40 (45) CuCrZr

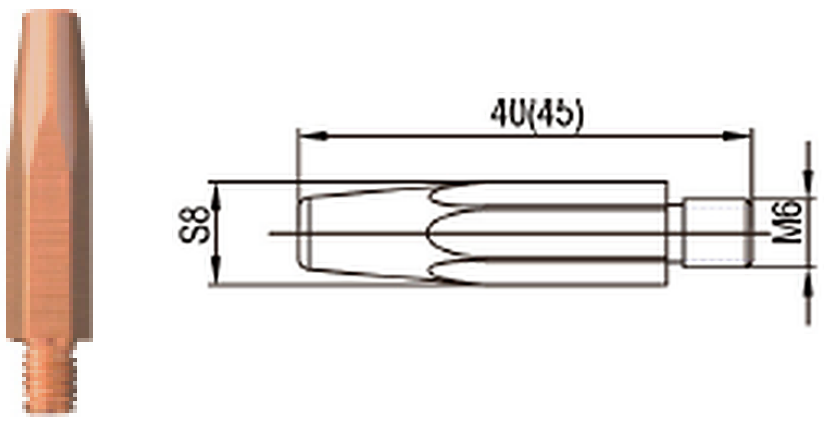

Part Number	Description
Z40 (45) /0.8	Contact Tip 0.8mm/.030
Z40 (45) /0.9	Contact Tip 0.9mm/.035
Z40 (45) /1.0	Contact Tip 1.0mm/.040
Z40 (45) /1.2	Contact Tip 1.2mm/.045

Contact Tip S8 × 69 CuCrZr

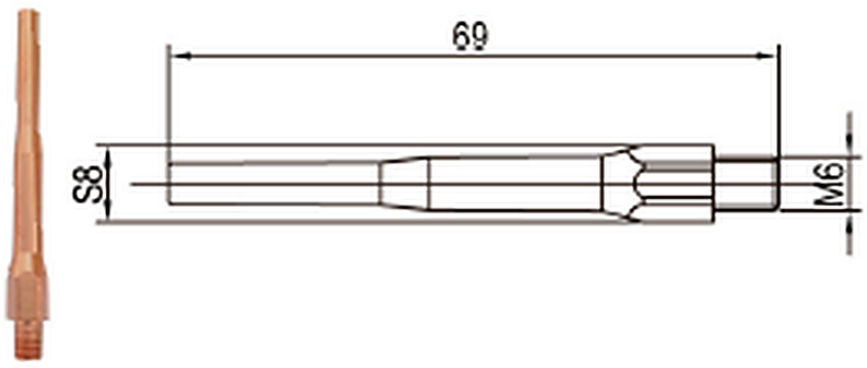

Part Number	Description
Z69/0.8	Contact Tip 0.8mm/.030
Z69/0.9	Contact Tip 0.9mm/.035
Z69/1.0	Contact Tip 1.0mm/.040
Z69/1.2	Contact Tip 1.2mm/.045

Other Contact Tips

Contact Tip 10 × 38 mm CuCrZr

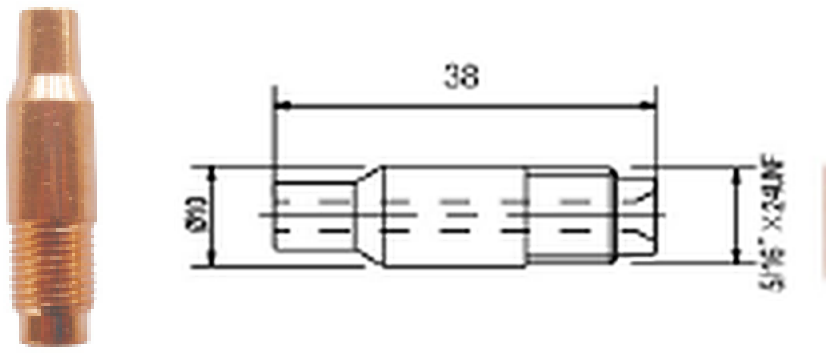

Part Number	Description
D10-3801	Contact Tip 1.2mm/.01
D10-3802	Contact Tip 1.4mm/.02
D10-3803	Contact Tip 1.6mm/.03
D10-3804	Contact Tip 1.8mm/.04
D10-3805	Contact Tip 2.0mm/.05
D10-3806	Contact Tip 2.4mm/.06

Contact Tip 8 × 40 mm

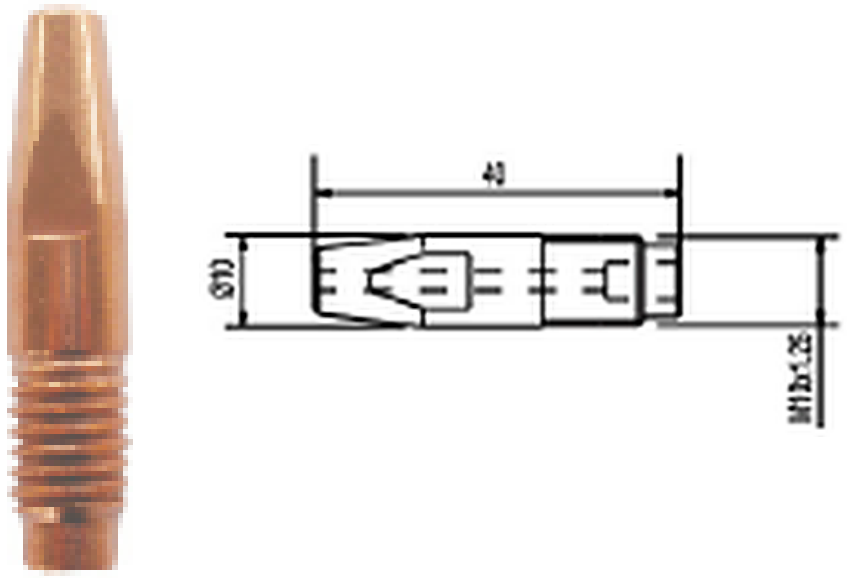

Part Number	Description
DFN8-4001	Contact Tip 1.2mm/.01

Contact Tip 9 × 38 mm

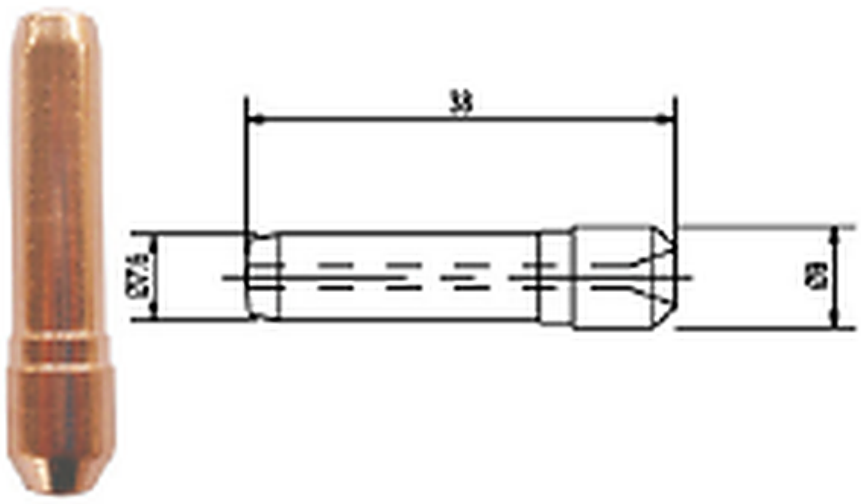

Part Number	Description
D9-3803	Contact Tip 1.2mm/.03

Contact Tip 28 mm

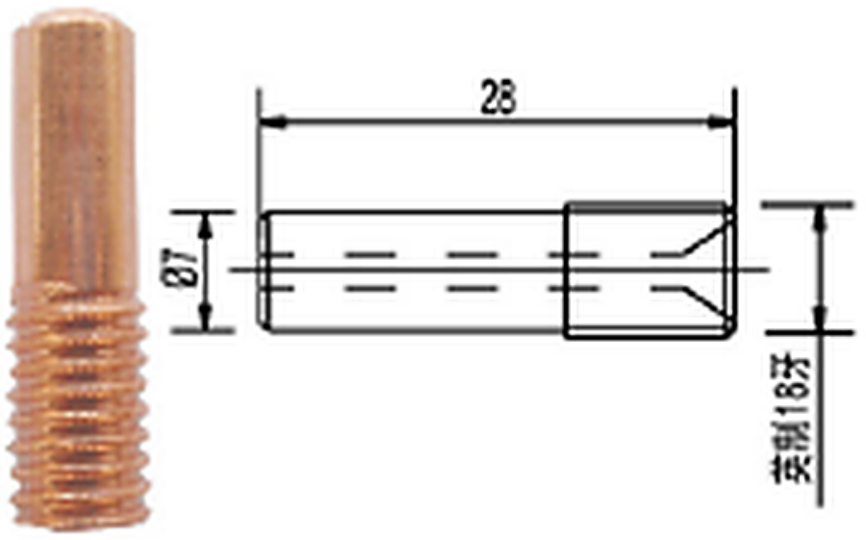

Part Number	Description
DM7-2801	Contact Tip 2.2mm/.01

Contact Tip 8 × 35 mm

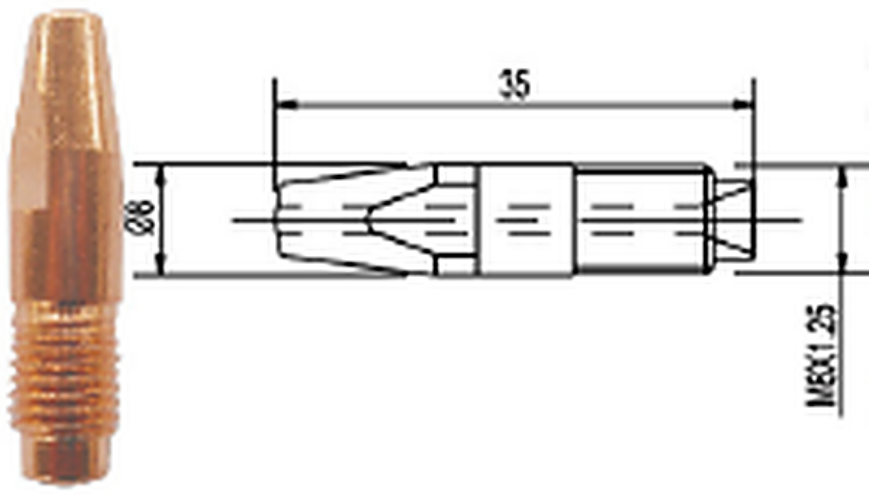

Part Number	Description
DFN8-3503	Contact Tip 1.2mm/.03

Contact Tip S10 × 35 mm

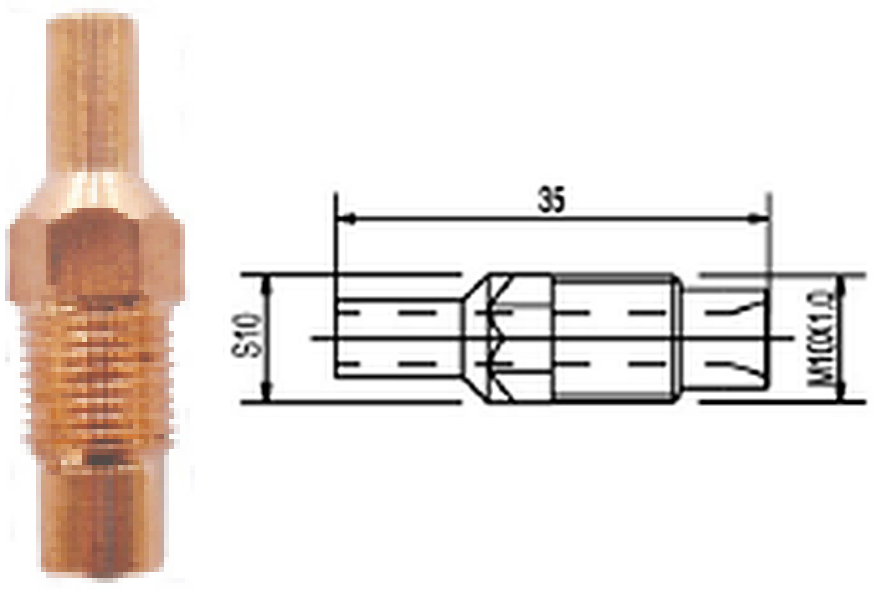

Part Number	Description
DPS10-3501	Contact Tip 3.0mm/.01

Other Contact Tips

Contact Tip S8 × 26 mm

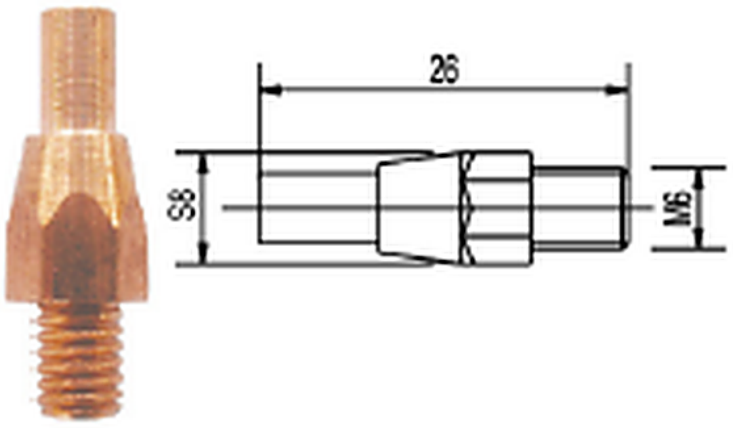

Part Number	Description
DPS8-2601	Contact Tip 1.4mm/.01

Contact Tip S8 × 30 mm

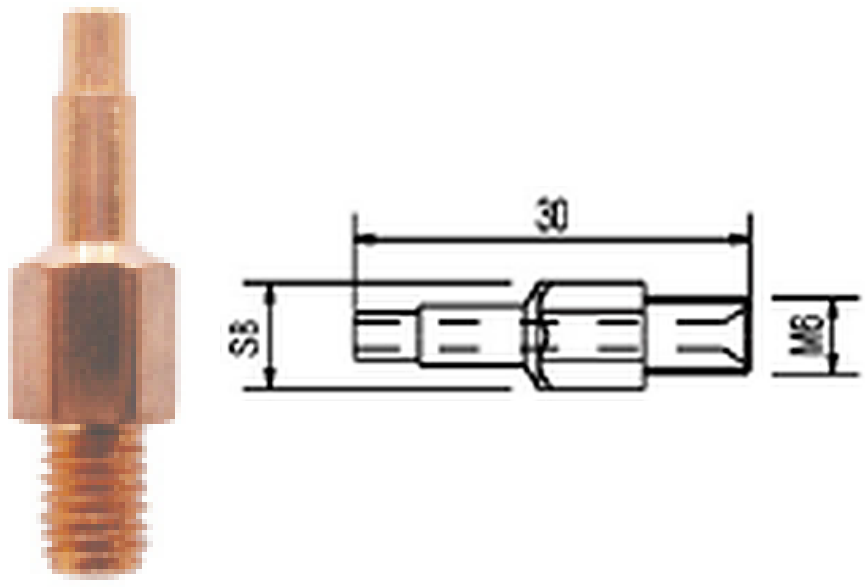

Part Number	Description
DPS8-3001	Contact Tip 1.6mm/.01

Contact Tip S8 × 29 mm

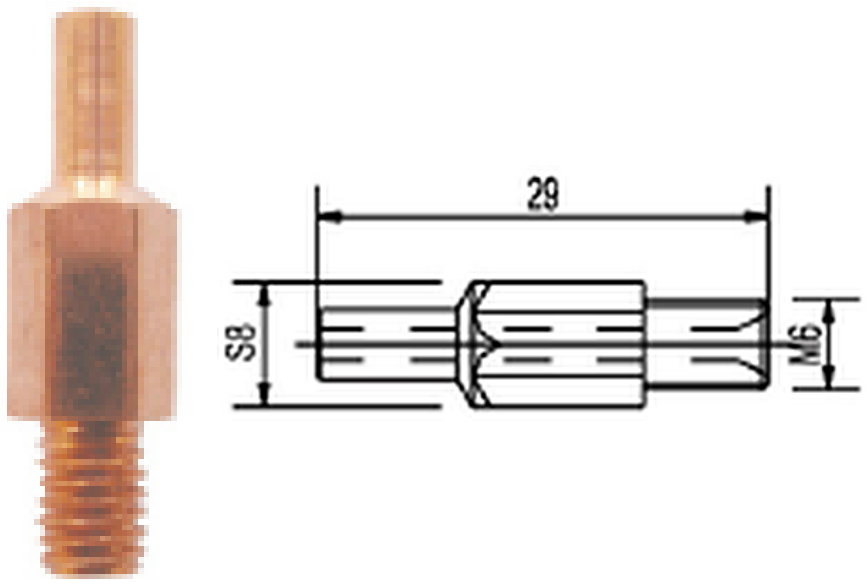

Part Number	Description
DPS8-2901	Contact Tip 2.2mm/.01

Binzel Nozzles

MB15

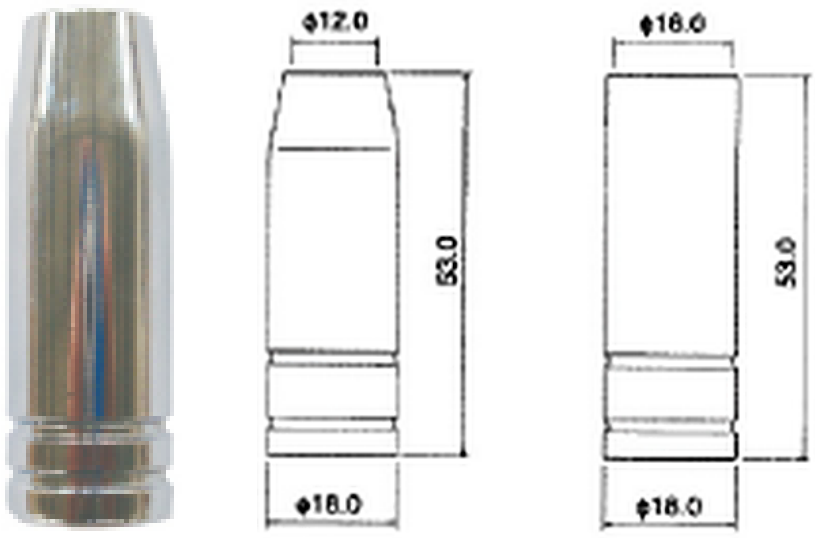

Part Number	Description
145.0075	Nozzle Conical
145.0041	Nozzle Cylindrical

MB25

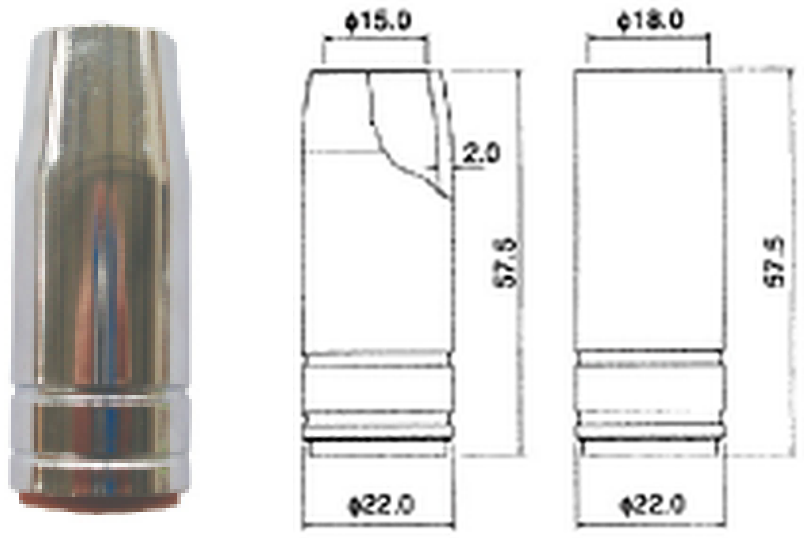

Part Number	Description
145.0076	Nozzle Conical
145.0042	Nozzle Cylindrical

MB24

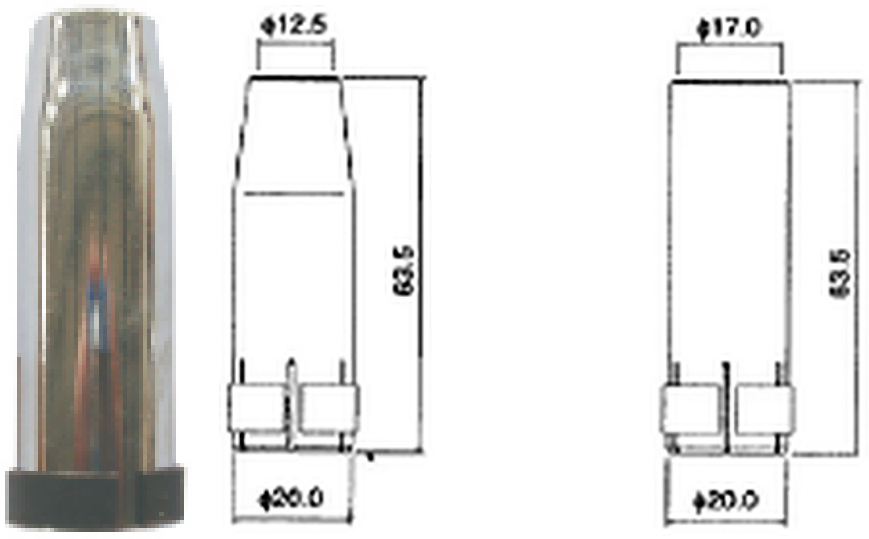

Part Number	Description
145.0080	Nozzle Conical
145.0047	Nozzle Cylindrical

MB36

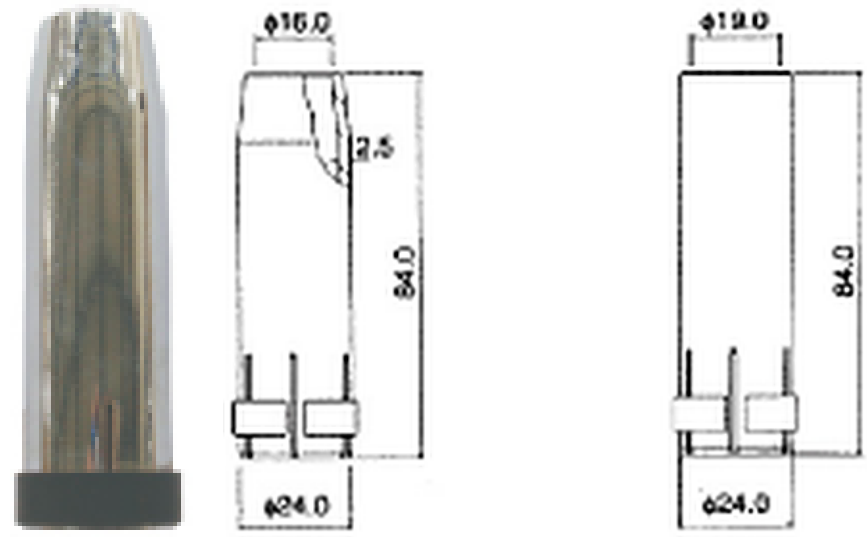

Part Number	Description
145.0078	Nozzle Conical
145.0045	Nozzle Cylindrical

Economy MB36

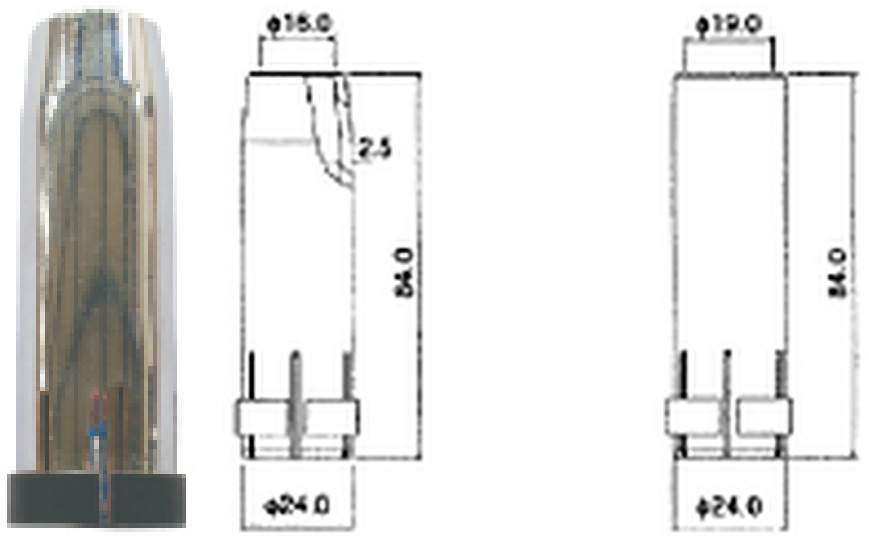

Part Number	Description
ECO145.0078	Eco Nozzle Concal
ECO145.0045	Eco Nozzle Cylindrical

MB40

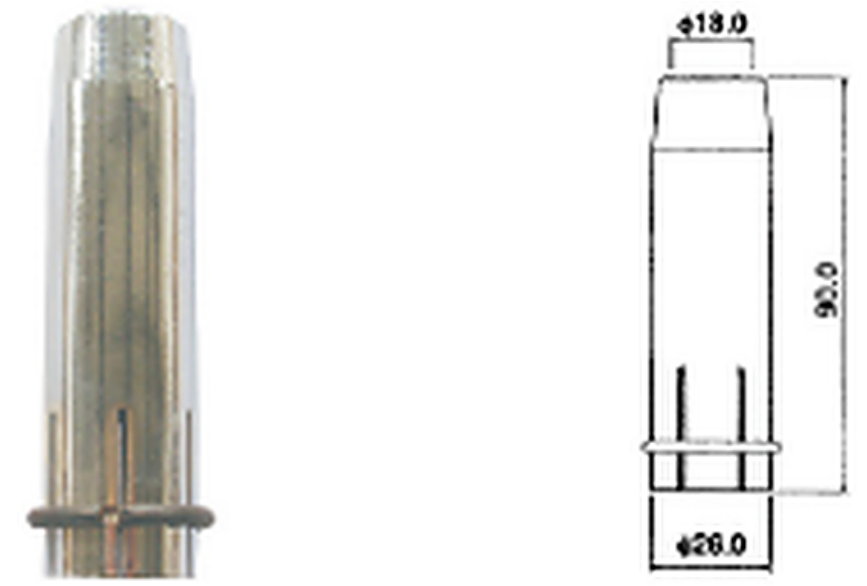

Part Number	Description
145.0079	Nozzle Conical

Panasonic / OTC Nozzles

KR500

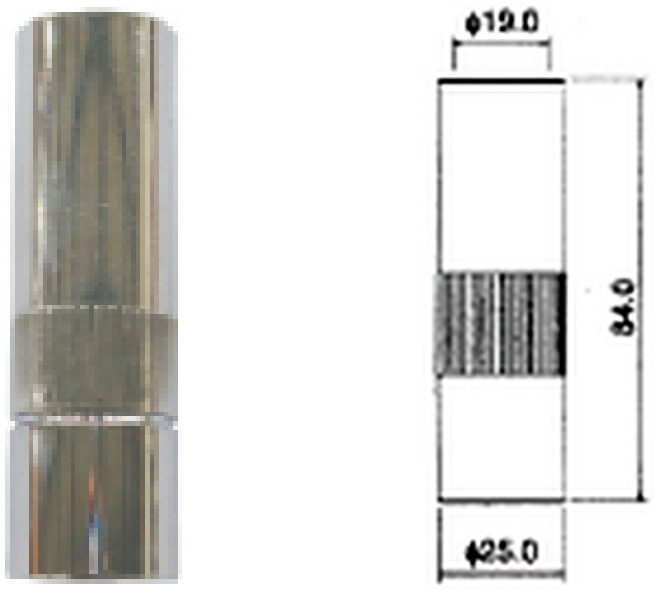

Part Number	Description
TGN00014	Nozzle Cyolindrical

KR350

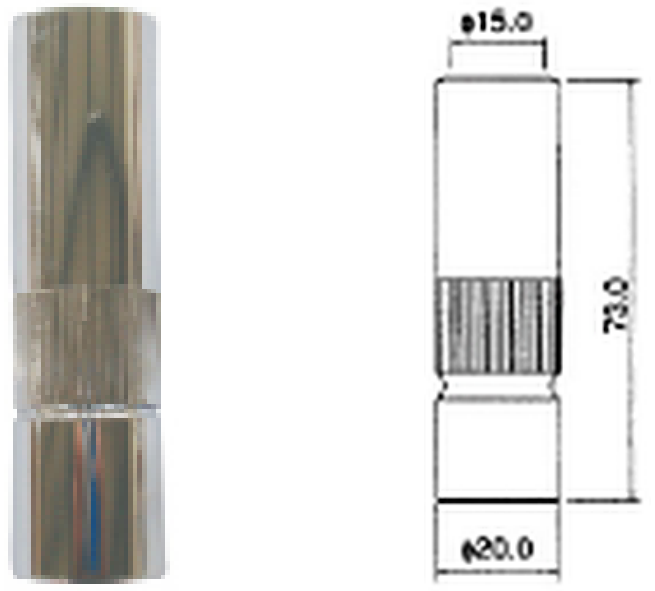

Part Number	Description
TGN01610	Nozzle Cyolindrical

KR200

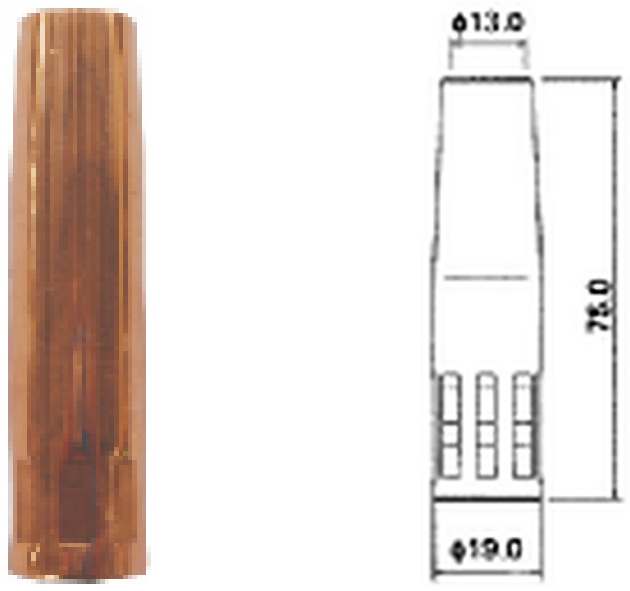

Part Number	Description
TGN01208	NozzleSelf Insulated

OTC 200

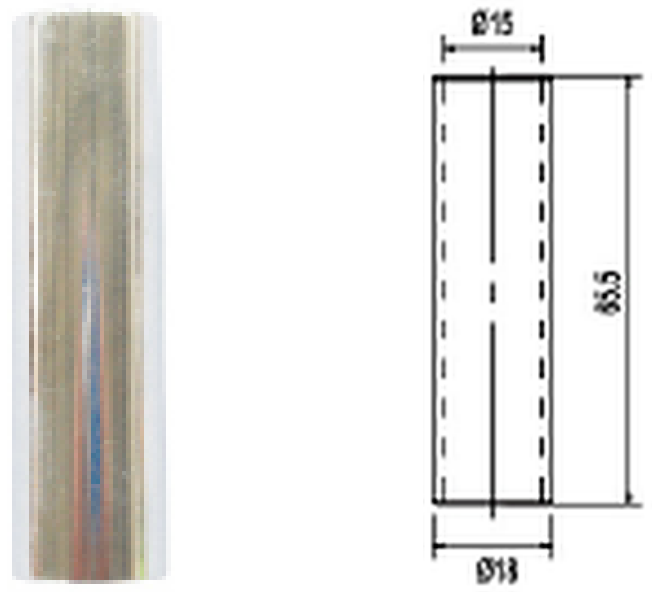

Part Number	Description
65.5×18	NozzleSelf Cyolindrical

OTC 500

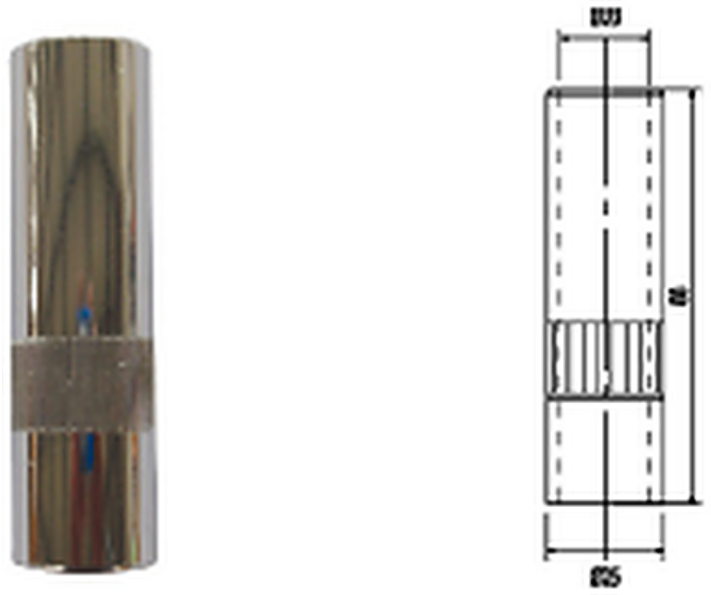

Part Number	Description
88×25	NozzleSelf Cyolindrical

OTC 350

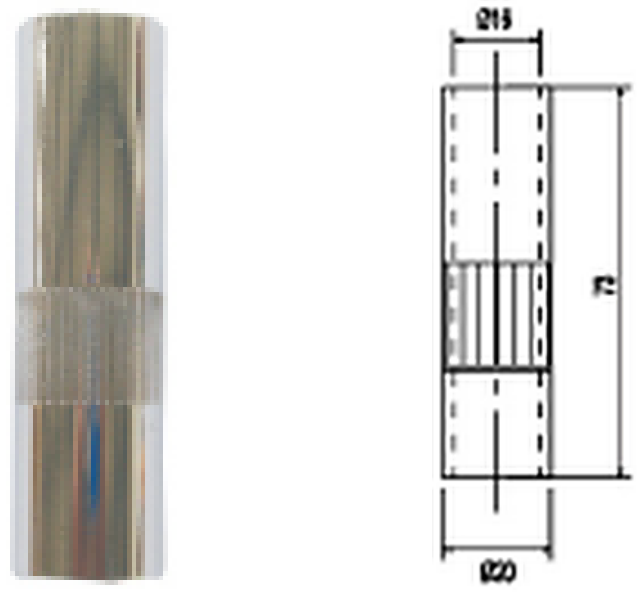

Part Number	Description
73×20	NozzleSelf Cyolindrical

OTC / Tweco Nozzles

20X65



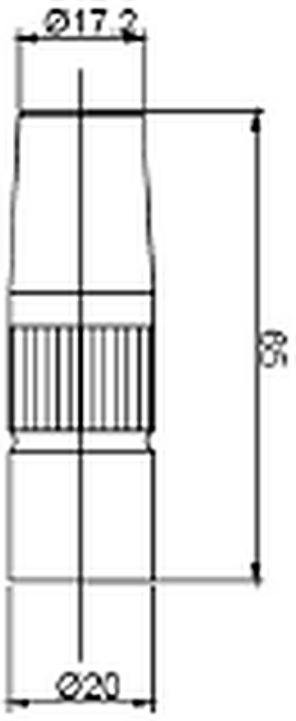

20XL



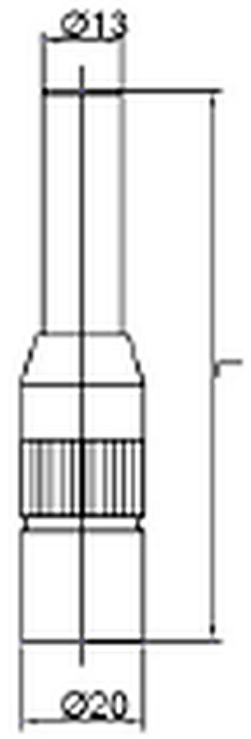

FNS 25X79



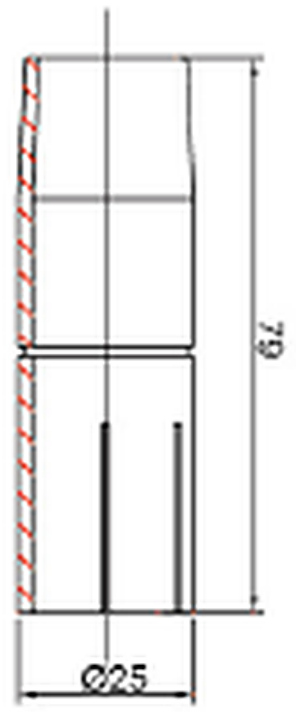

SAF 30X89



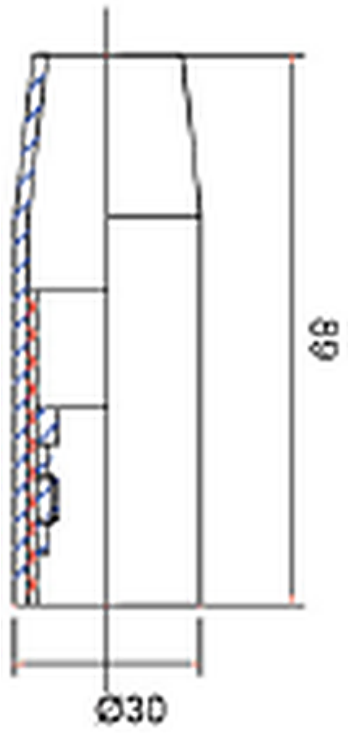

N01



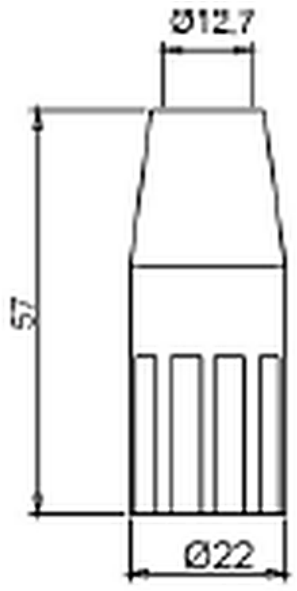

Part Number	Description
21-50	Nozzle Self Insulated

N02

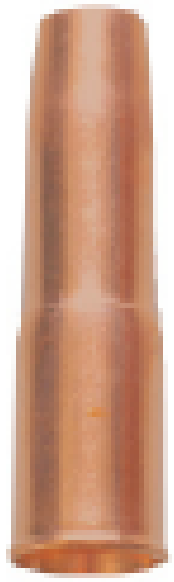

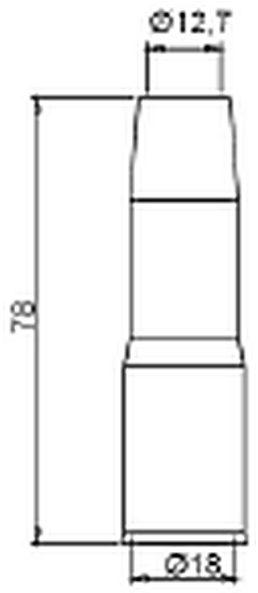

Part Number	Description
22-50	Nozzle Adjustable

Binzel Tip Adaptors

MB15

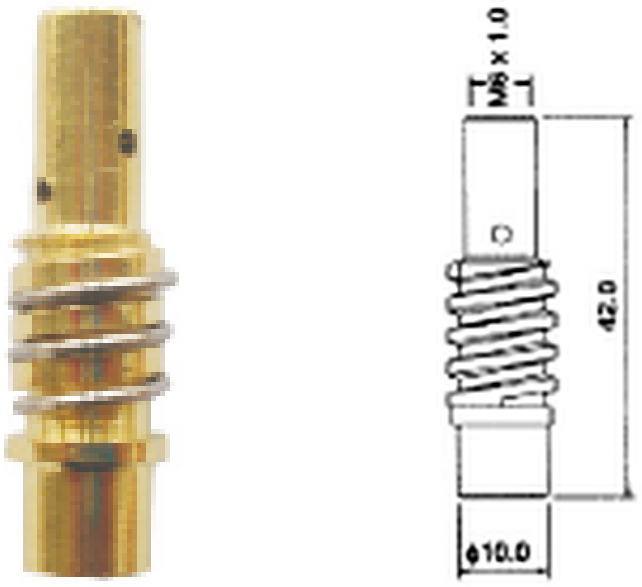

Part Number	Description
002.0078	Tip Adaptor

MB24

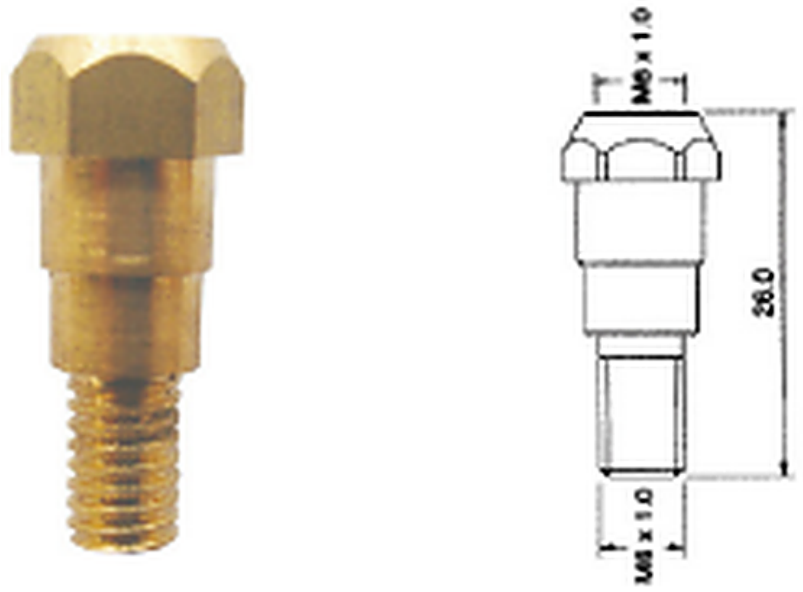

Part Number	Description
142.0003	Tip Adaptor

MB25

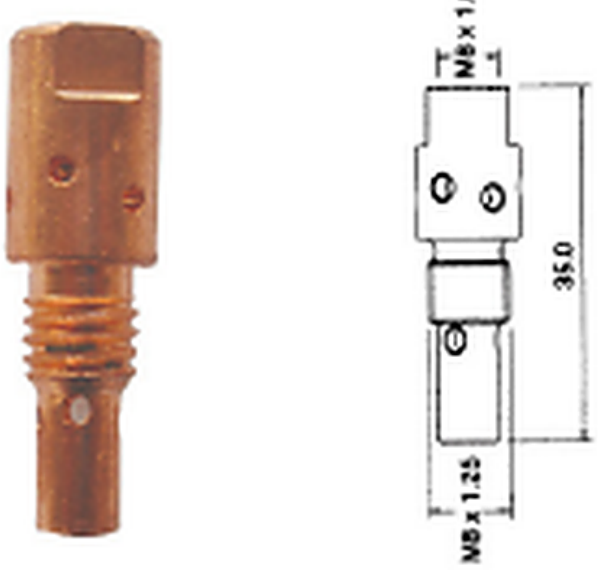

Part Number	Description
142.0001	Tip Adaptor

MB26

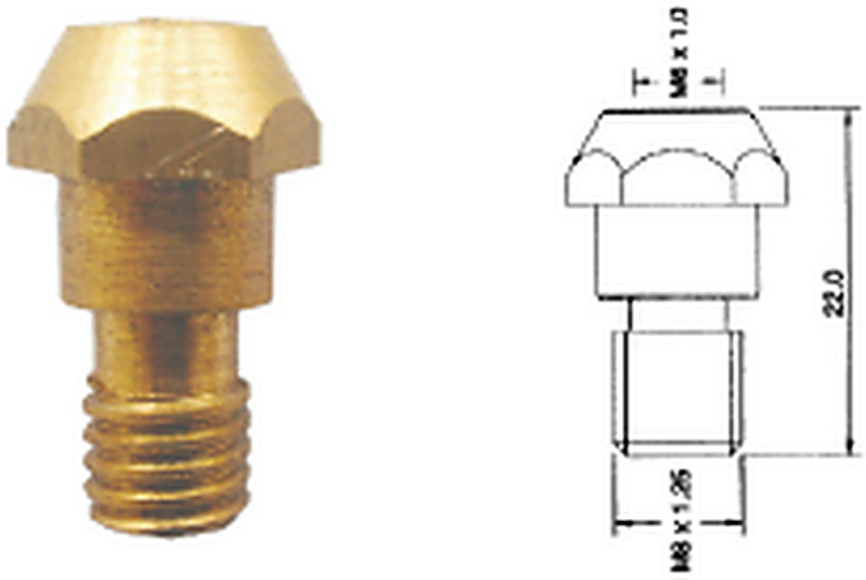

Part Number	Description
142.0007	Tip Adaptor

MB36

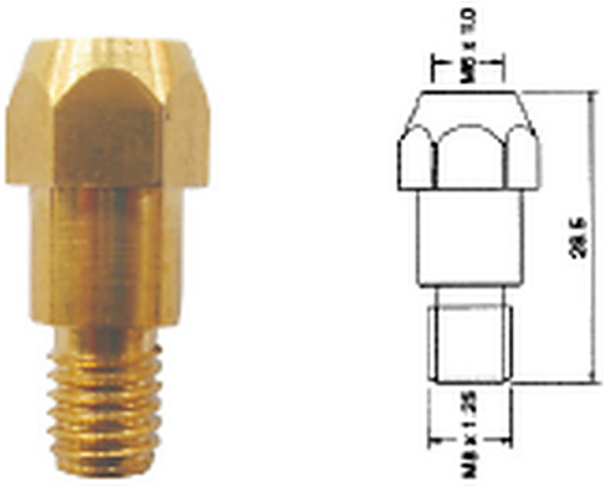

Part Number	Description
142.0005	Tip Adaptor 28.5 M6
142.0011	Tip Adaptor 31.5 M6
142.0020	Tip Adaptor 28.5 M8

MB40

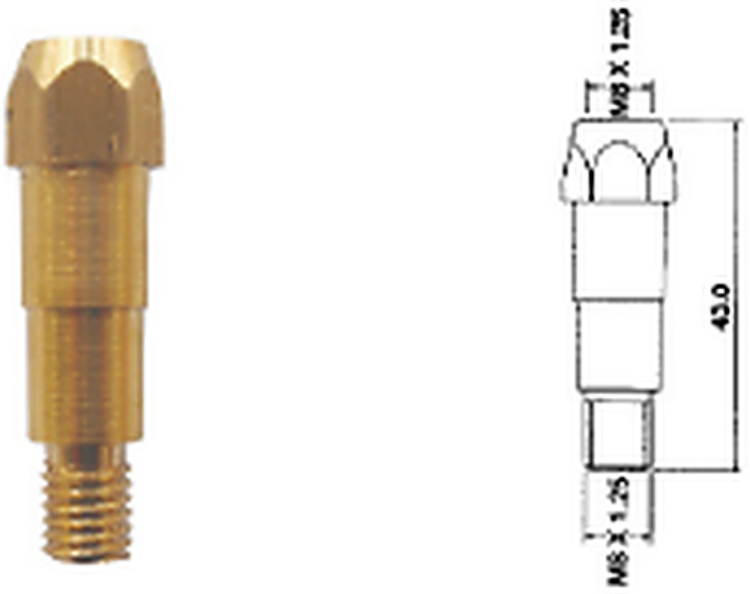

Part Number	Description
142.0021	Tip Adaptor

Panasonic / OTC Tip Adaptors

KR500

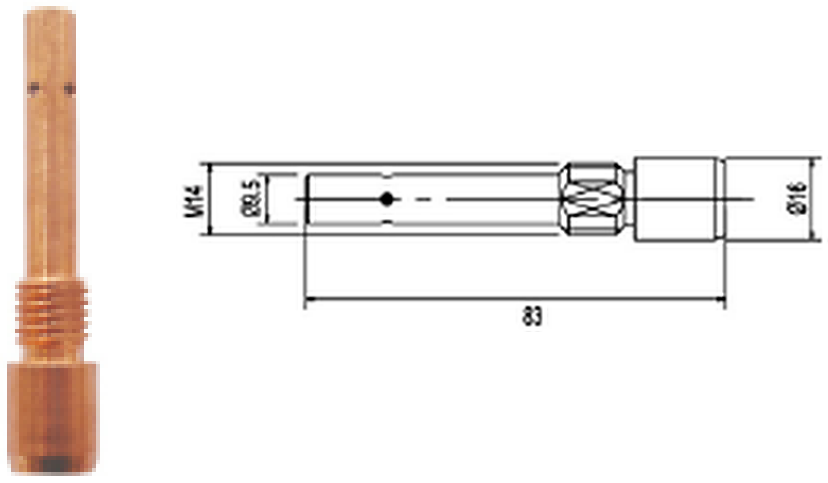

Part Number	Description
50011	Tip Adaptor 14 x 1
50011	Tip Adaptor 13 x 1
50011	Tip Adaptor 12 x 1

KR350

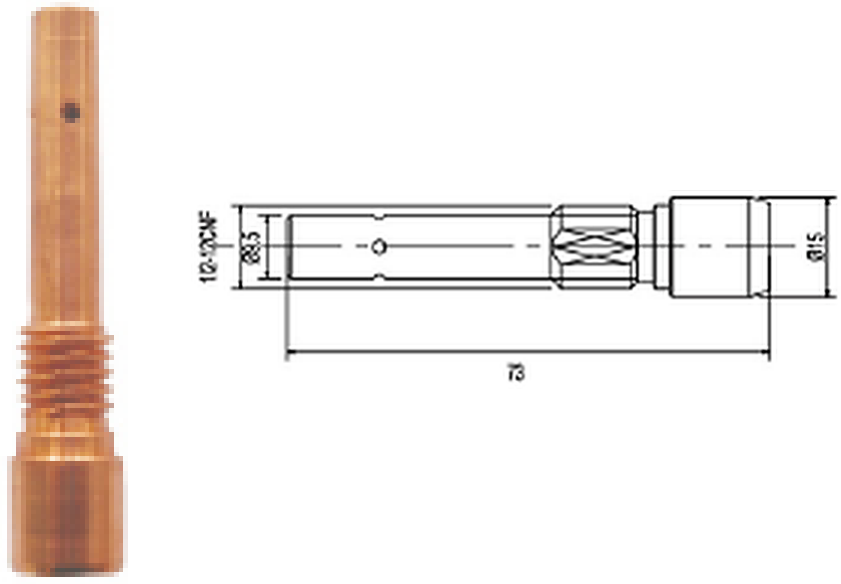

Part Number	Description
内丝	Tip Adaptor 12 x 1

KR350

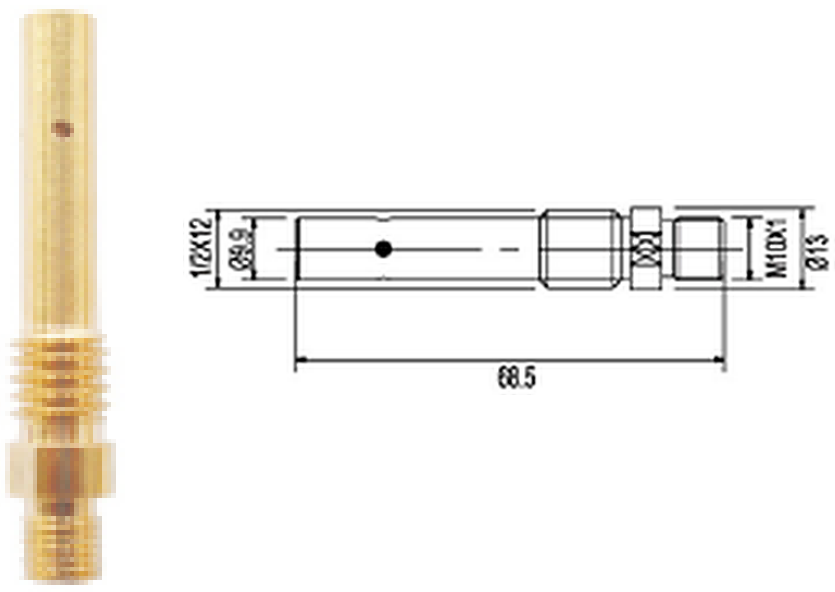

Part Number	Description
外丝	Tip Adaptor

KR200

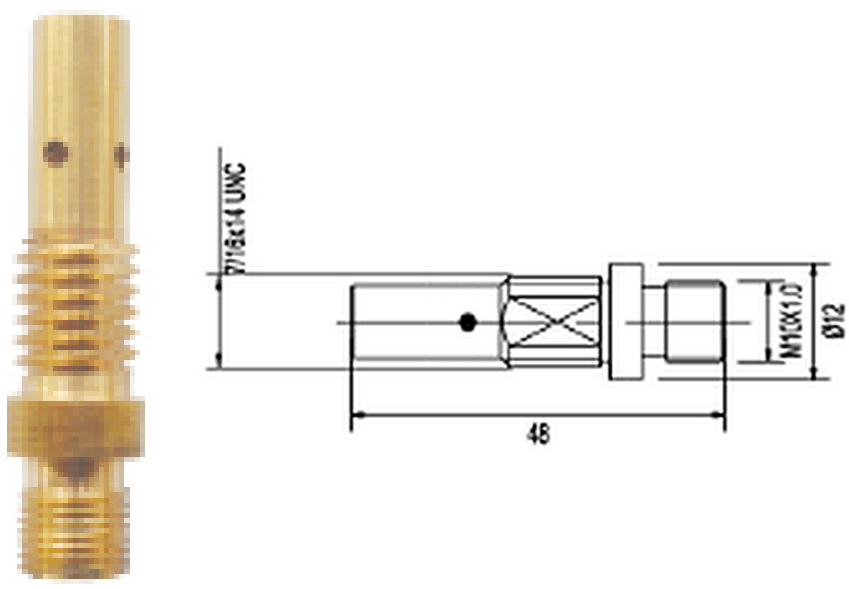

Part Number	Description
KR200A	Tip Adaptor

OTC500

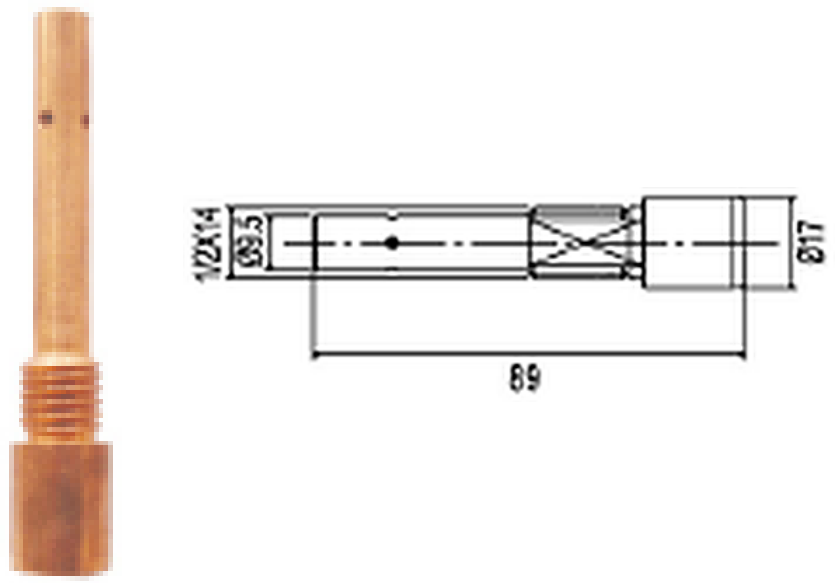

Part Number	Description
DJO 500A	Tip Adaptor

DJO 350

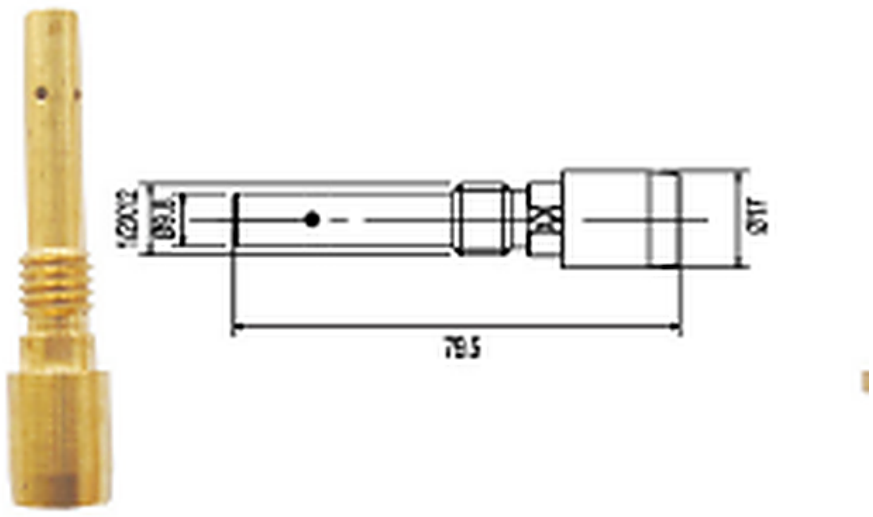

Part Number	Description
OTC350A	Tip Adaptor

Panasonic / OTC Tip Adaptors

OTC200

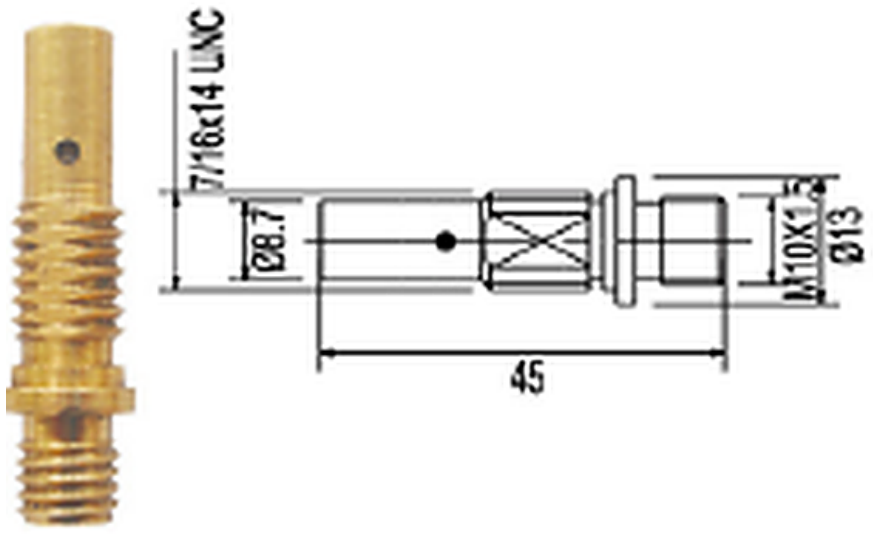

Part Number	Description
DJO 200A	Tip Adaptor

Gas Diffusers / Insulators

Gas Diffuser

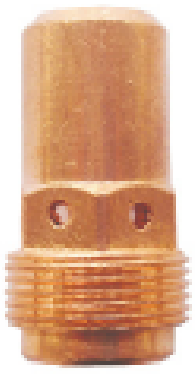

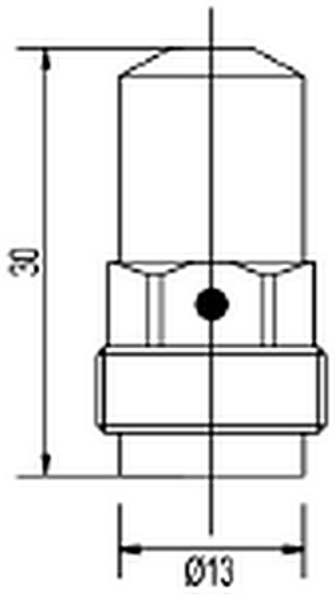

Part Number	Description
	Gas Diffuser

Gas Diffuser



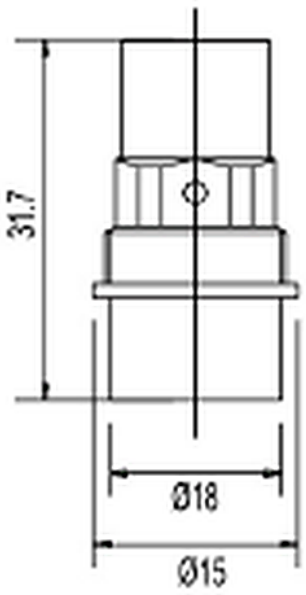

Part Number	Description
	Gas Diffuser

Gas Diffuser



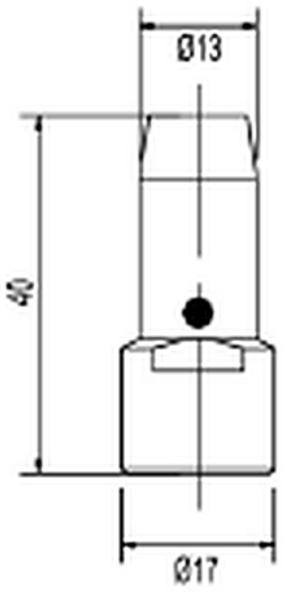

Part Number	Description
	Gas Diffuser

Tip Adaptor DJO L80



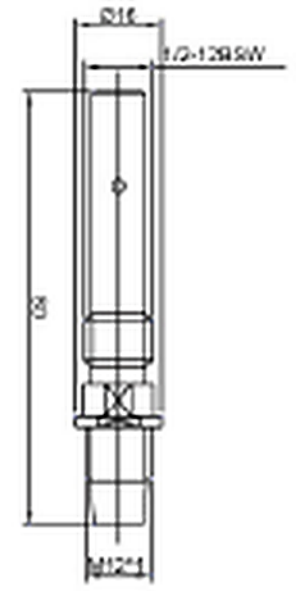

Part Number	Description
DJO L80	Tip Adaptor

Tip Adaptor DJO L87

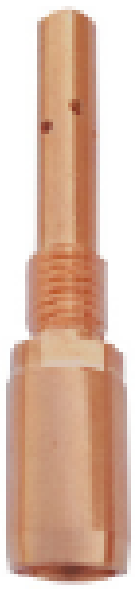

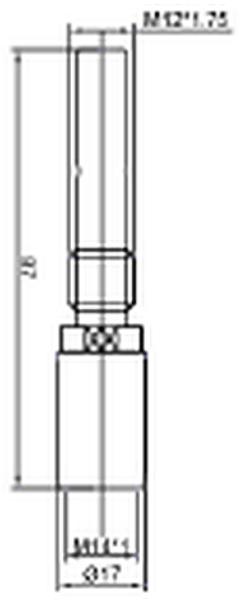

Part Number	Description
DJO L87	Tip Adaptor

Tip Adaptor DJO L94



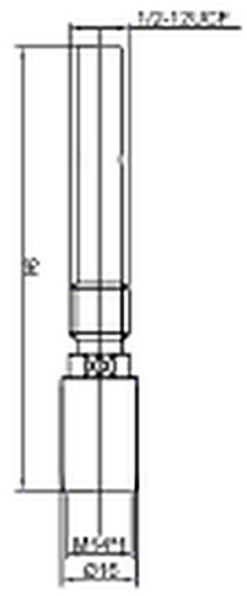

Part Number	Description
DJO L94	Tip Adaptor

Panasonic Swan Neck / SAW Tip Holders

Insulator 200A

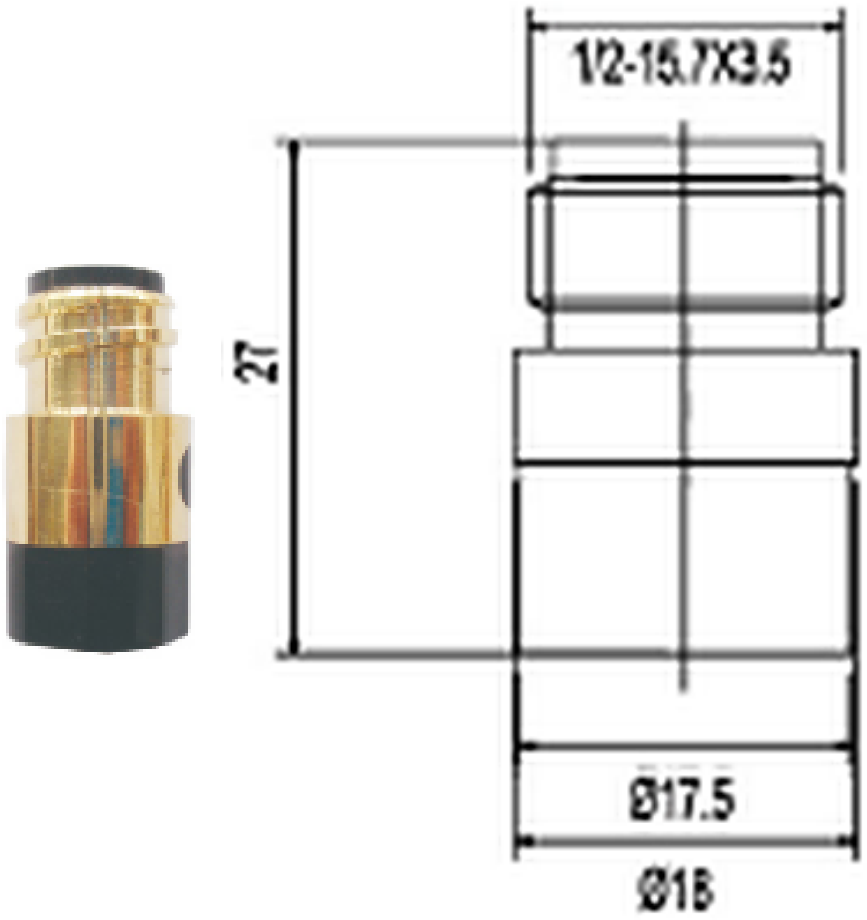

Part Number	Description
TGN20105	Insulator

Insulator 500A

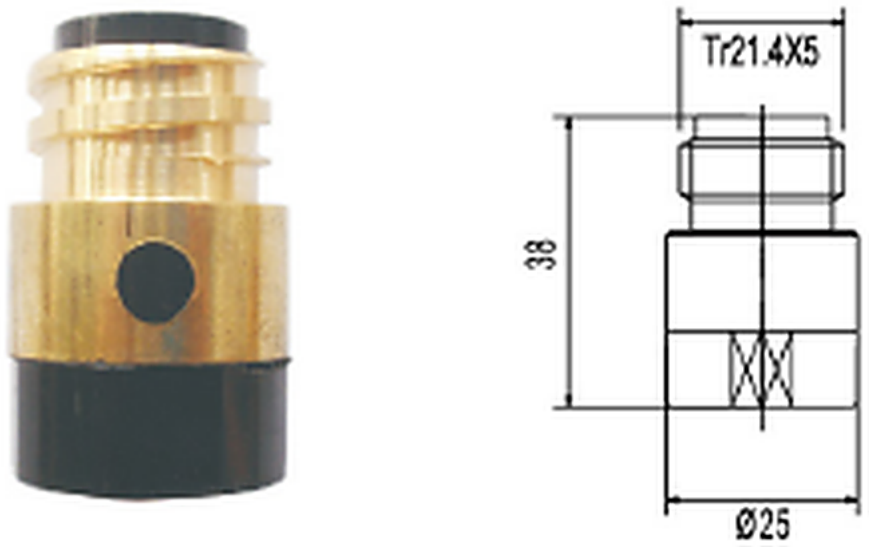

Part Number	Description
TGN50107	Insulator

Insulator 350A

Part Number	Description
TGN35101	Insulator

Insulator 350Z

Part Number	Description
TGN35DJOZ	Insulator

SAW Tips

SAW Tip 13 × 40 mm

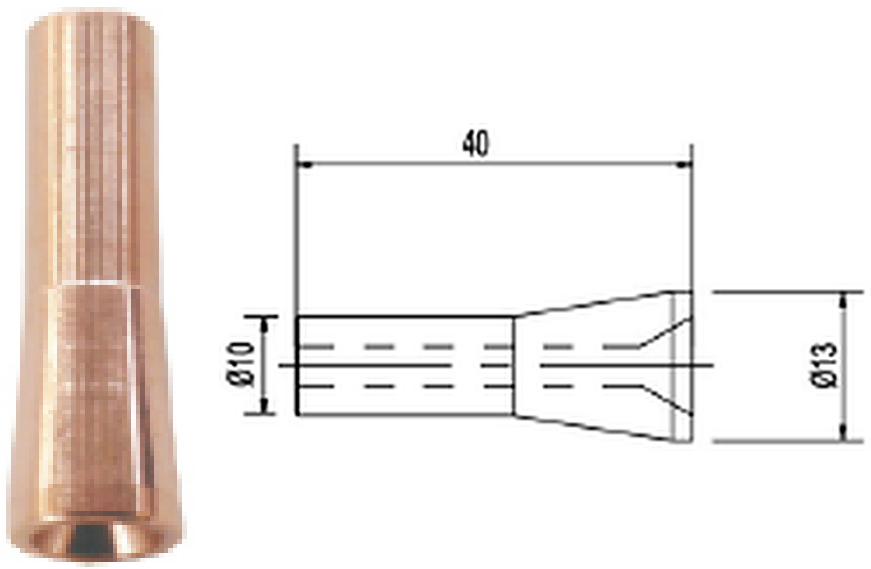

SAW Tip 14 × 38 mm

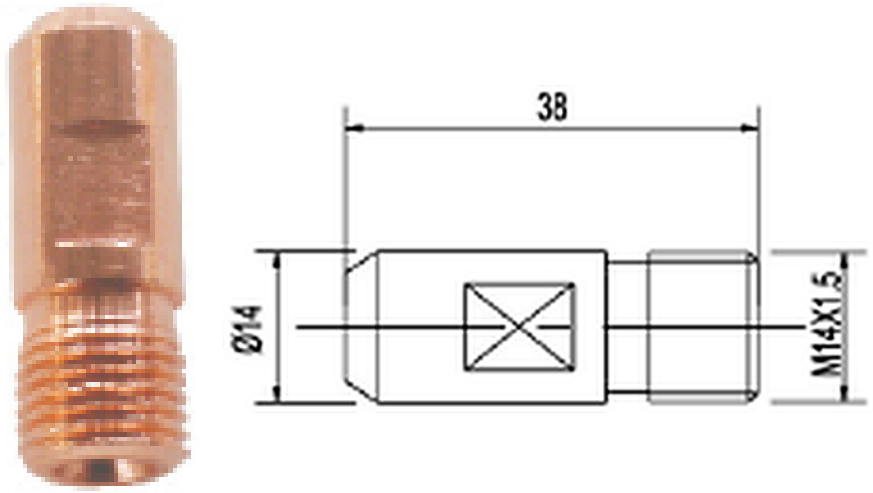

SAW Tip 16 × 34 mm

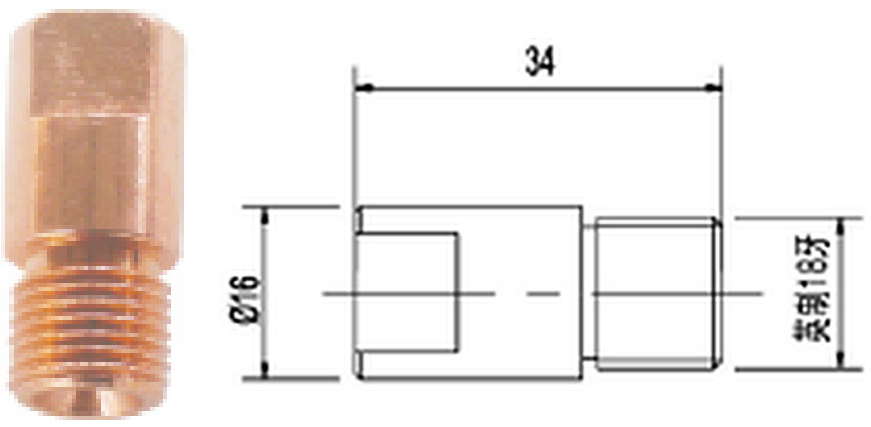

SAW Tip 16 × 35 mm

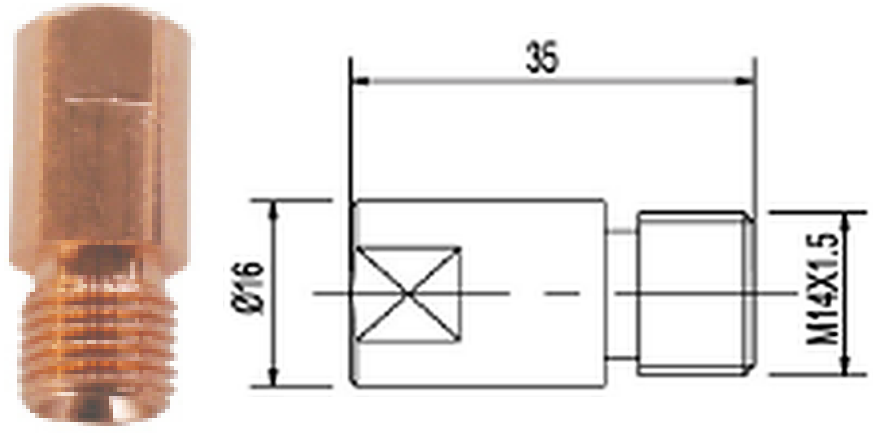

SAW Tip 16 × 35 mm

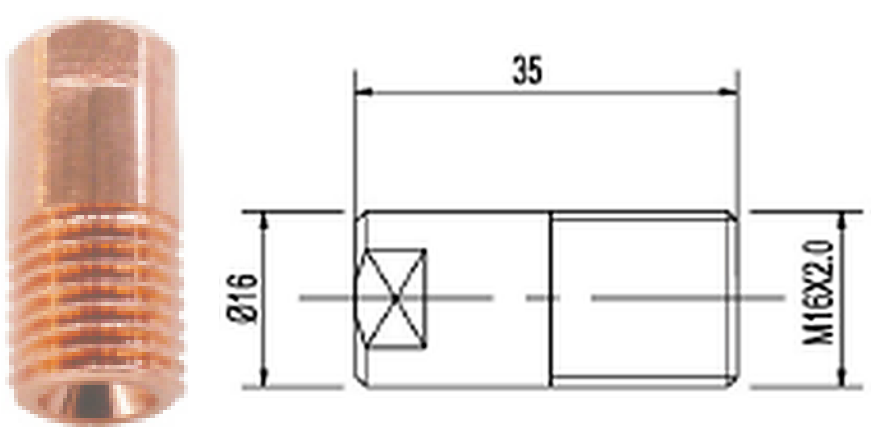

SAW Tip 16 × 35 mm

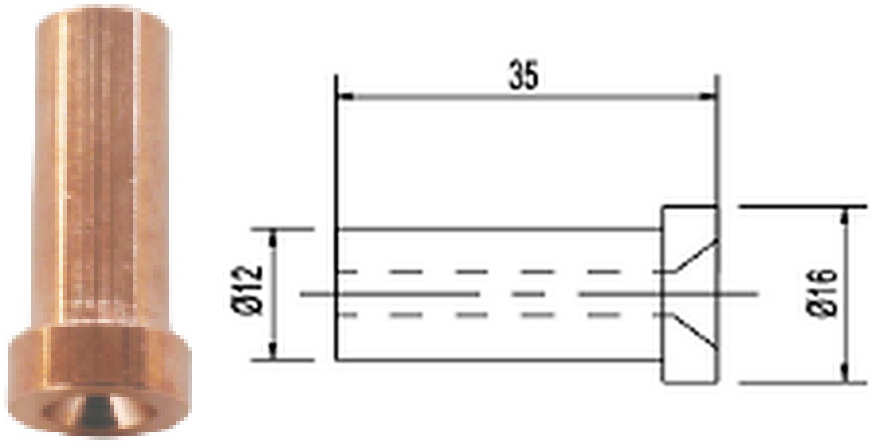

SAW Tips

SAW Tip 16 × 40 mm

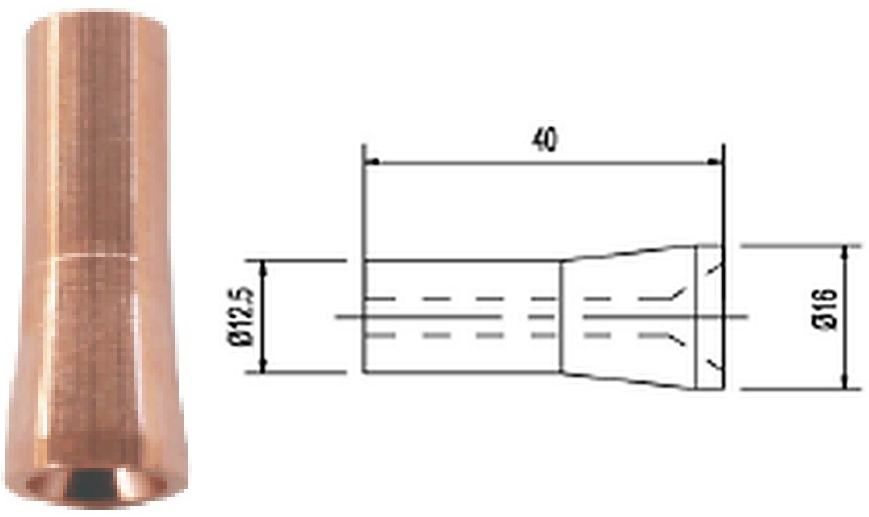

SAW Tip 16 × 40 mm

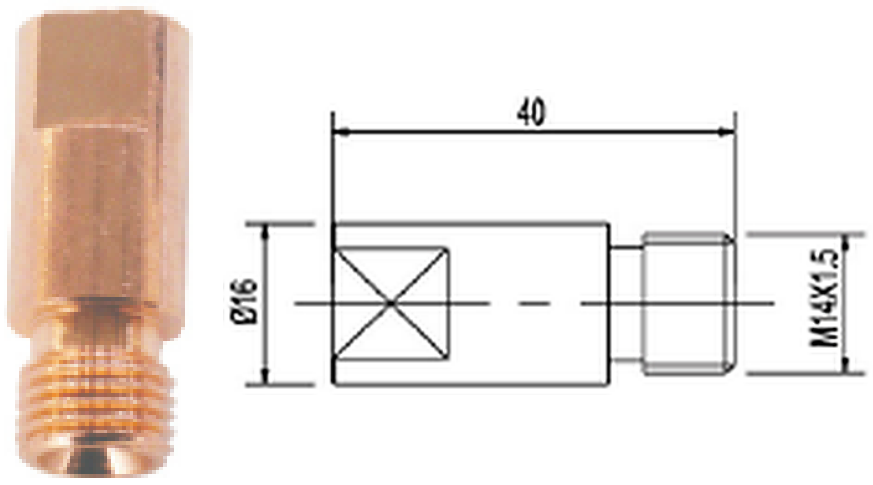

SAW Tip 16 × 40 mm

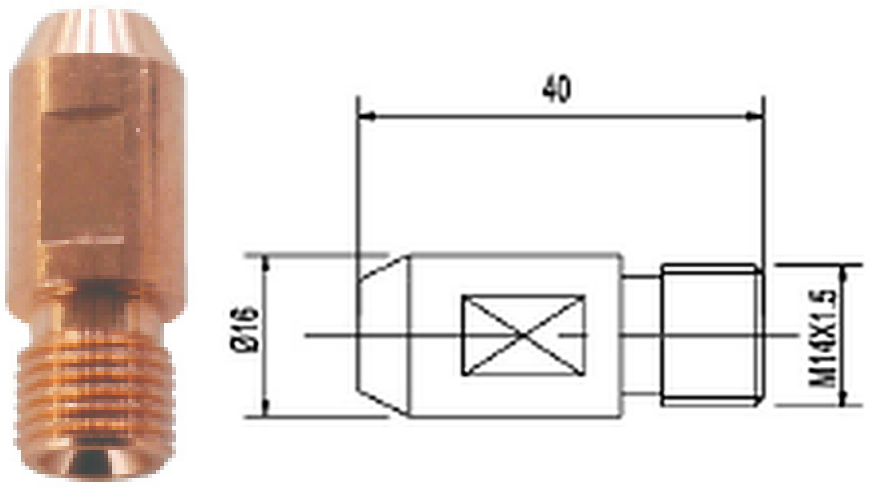

SAW Tip 16 × 48 mm

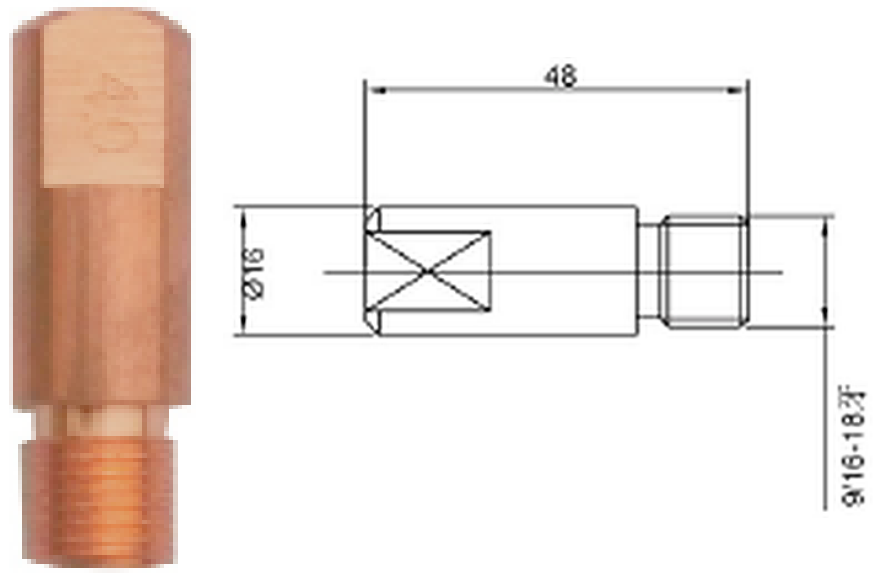

SAW Tip 19.5 × 30 mm

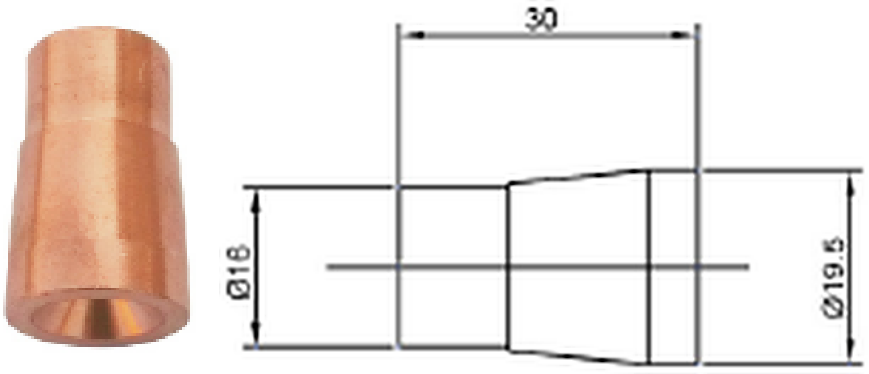

SAW Tip 18 × 40 mm

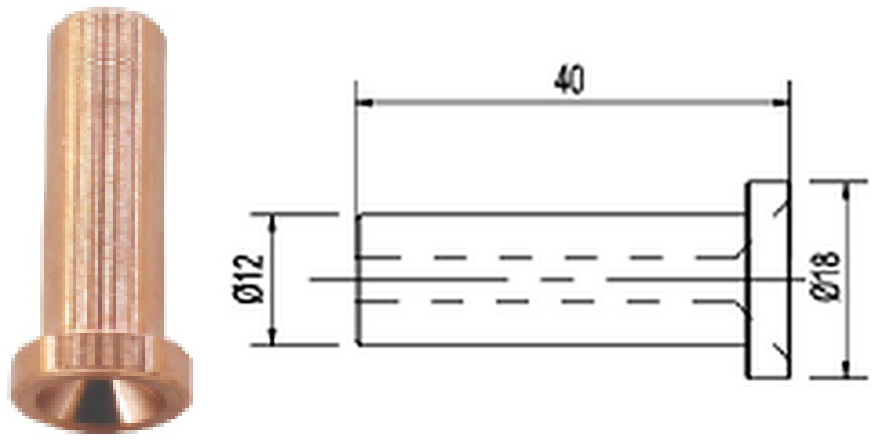

SAW Tips

SAW Tip 18 × 60 mm

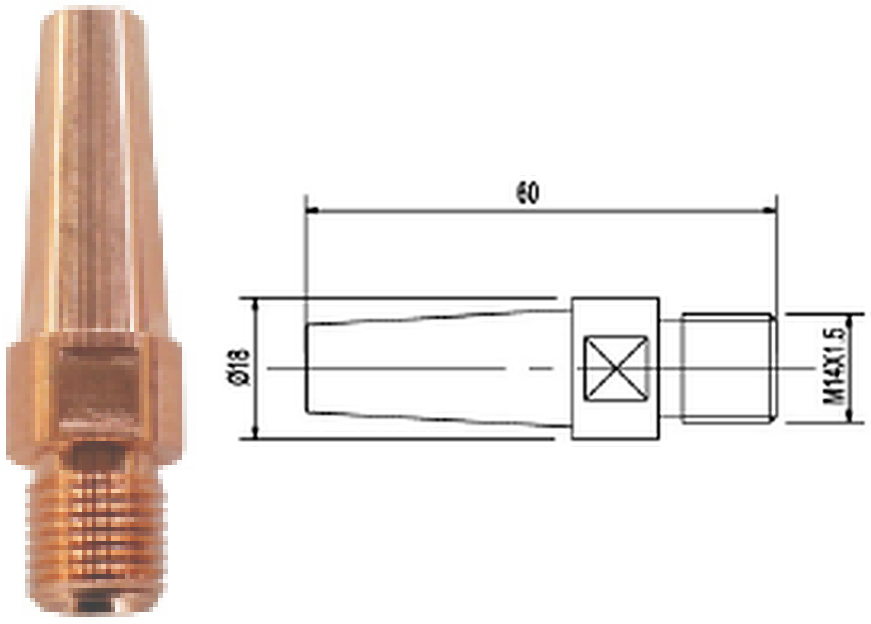

SAW Tip 18 × 65 mm

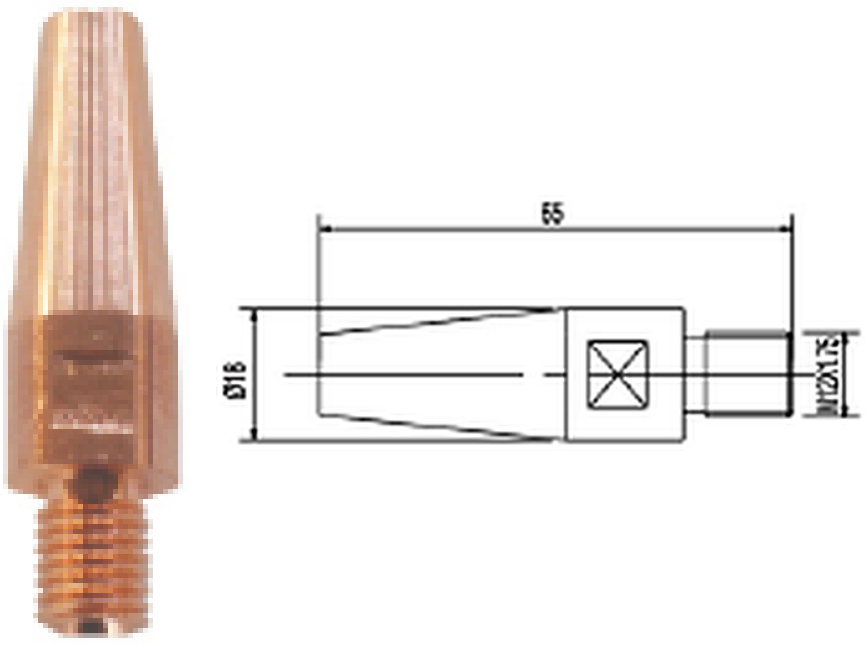

SAW Tip 20 × 50 mm

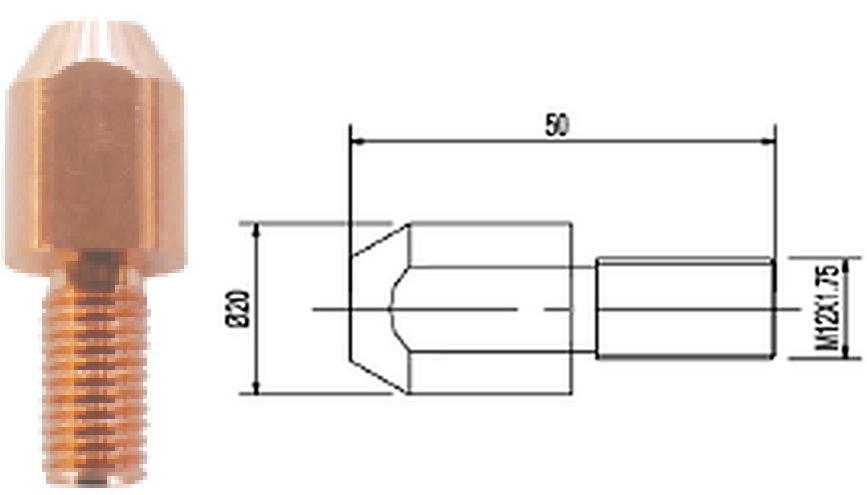

SAW Tip 25X95 mm

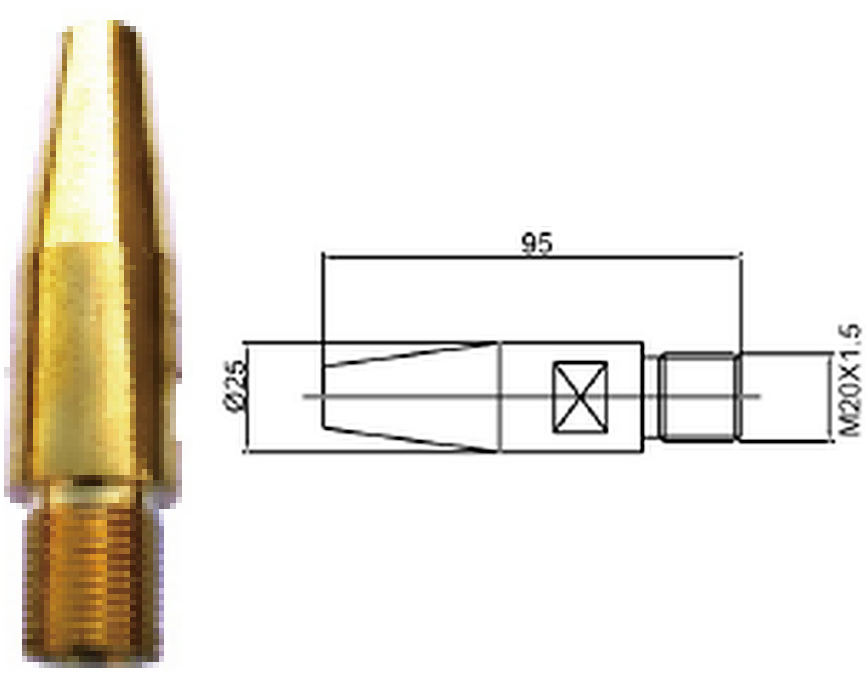

SAW Tip 22 × 60 mm

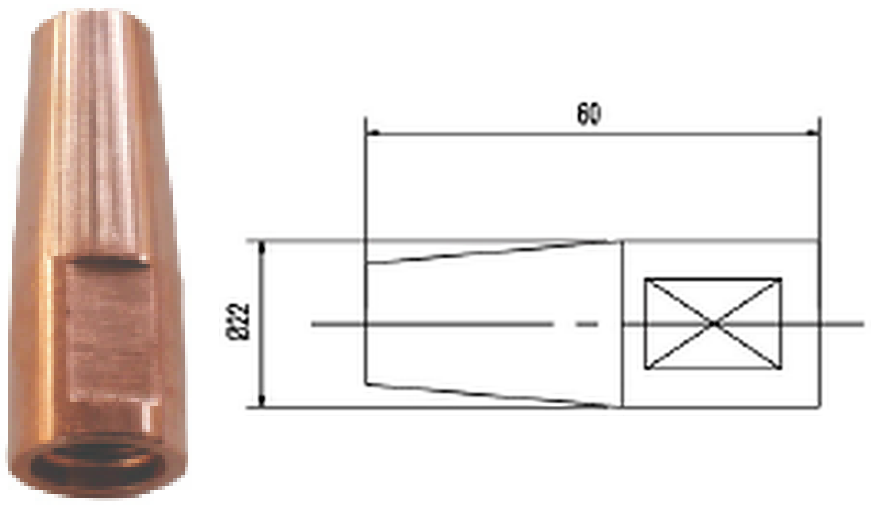

SAW Tip S17 × 40.5 mm

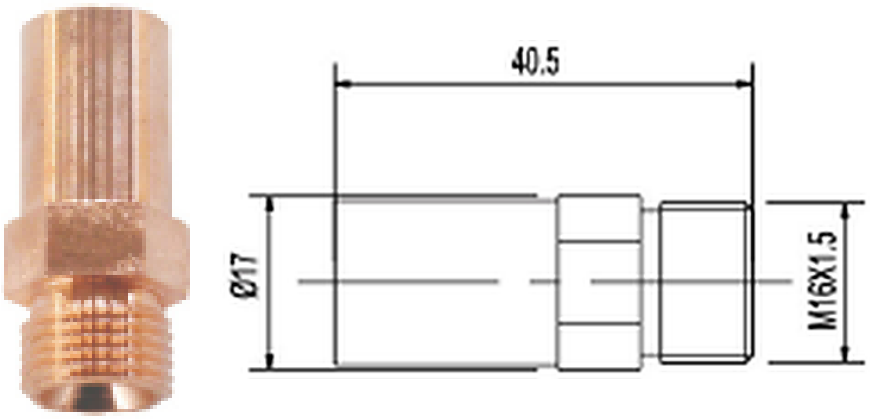

Torches

XY-15Ak



XY-25AK



XY-24KD



Torches

XY-501D



XY-36KD



XY-B3



Torches

XY-200A



XY-T#1



XY-350A



Torches

XY-F250



XY-500A



XY-F500

