WELDPARTS USA

RESISTANCE WELDING

2026 PRODUCT CATALOG



Electrodes, holders, guide pins and accessories

6500 Corporate Drive • Cincinnati, OH 45242

weldparts.com

VIEW INDEX ›

Index

INDEX.....2
OUR MISSION.....3
COMPANY INFORMATION.....4
MATERIAL PAGE.....5
OVERVIEW.....6
POINT HOLDERS 7-9
CLAMPER.....7
WATER NIPPLES.....9
WATER CONNECTORS.....9
WATER TUBES.....9
SCREW ADAPTERS.....10
CREATE A THREADED ADAPTER....11
SHANKS.....12-15
STRAIGHT SHANKS.....12,14
OFFSET SHANKS.....13
STEP SHANKS.....14
CREATE A SHANK.....15
CAP TIPS.....16
CREATE A CAP TIP.....17
BASE TIPS.....18
CREATE A STRAIGHT TIP.....19
L-TYPE HOLDERS.....20-21
INSERT ELECTRODES & HOLDERS....22-23
PROJECTION NUT WELDING.....22-24
UPPER ELECTRODES.....22-23
LOWER ELECTRODES.....22
ELECTRODES BODYS.....23
CREATE AN ELECTRODE.....24
GUIDE PINS.....25-31
KCF MATERIAL.....25
GUIDE PIN MATERIAL.....26
TMS STYLE GUIDE PINS.....27-28
A-STYLE GUIDE PINS.....29
SKK STYLE GUIDE PINS.....30
CREATE A GUIDE PIN.....31
SHUNT.....32
CREATE A SHUNT.....33
CABLE.....34
WELDING ACCESSORIES.....35-44
TIP REMOVER.....35-36
TIP DRESSER.....37
CUTTER BLADES.....38-41
DRESSING TOOL.....42
NUT/BOLT FEEDER.....43-44
CENTRAL TIP DRESSER.....45
SERVICES.....46-47
GLOSSARY.....48-50

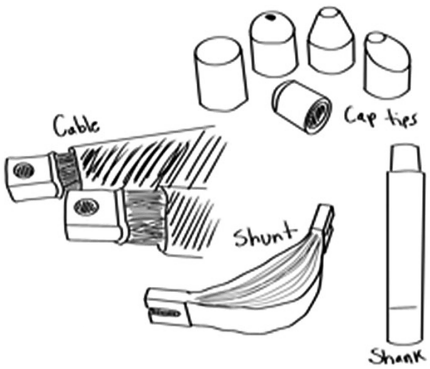



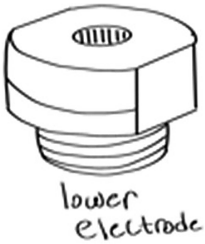

6500 Corporate Drive, Cincinnati, OH 45242 **Tel:** 513-530-0064 **e-mail:** info@weldparts.com

OUR MISSION

Founded in the year 2000 by the visionary Mikio Kusano, Weldparts has established itself as a cornerstone in the resistance welding industry. Situated just north of Cincinnati, OH, our journey began with a singular mission: to cater to the diverse needs of the welding community through unparalleled quality and innovation. Mikio Kusano, with his profound expertise and dedication, steered Weldparts to new heights before gracefully retiring from his active role.

Today, Weldparts is proudly owned and operated by Christina Colquhoun, Alan Colquhoun, and Robert Barenz. Together, they continue the legacy of excellence and commitment to customer satisfaction that has been the hallmark of Weldparts since its inception. Our team is passionate about welding and stands ready to support our customers with both knowledge and quality products.

At Weldparts, we understand the unique challenges and requirements of the welding industry. That's why we offer an extensive range of products to accommodate both American and Asian size electrodes, ensuring that our customers can find exactly what they need, regardless of their project scope or geographical location. Our inventory doesn't stop there; we provide a wide variety of accessories to complement your welding needs, including guide pins, shanks, adapters, gun arms, tip dressers, cutter blades, and nut feeders. Our commitment is to offer solutions that are as versatile and dynamic as our clients' projects.

Customization is at the core of what we do. We believe that every welding challenge has a unique solution, and our team is dedicated to crafting products that meet your specific requirements. No matter the shapes and sizes you need, Weldparts is equipped to deliver precision and excellence.

We invite you to reach out and explore how we can support your resistance welding needs.



VETERAN-OWNED ™

WOMAN OWNED BUSINESS

6500 Corporate Drive, Cincinnati, OH 45242 ***Tel:*** *513-530-0064* ***e-mail:*** *info@weldparts.com*

COMPANY INFORMATION

Company Name:	Weldparts, USA
CEO:	Christina Colquhoun
President:	Alan Colquhoun
Proprietor:	Robert Barenz
Established:	est. 2000
Address:	6500 Corporate Drive
	Blue Ash, Ohio, 45242
Phone:	(513) 530-0064
Email:	info@weldparts.com
URL:	www.weldparts.com

Products: Resistance Welding Accessories

- Nut Feeders
- Bolt Feeders
- Guide Pins (all styles)
  - Ceramic
  - KCF
- Electrodes
- Tip Dressers
- Cutter Blades
- Shunts
- Cables
- & more!



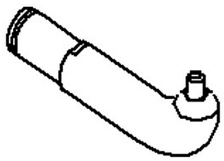

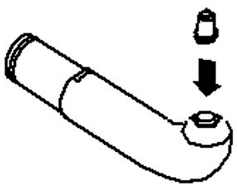

We also provide services for:

- Reforming Electrodes
- Reforming Cap Tips
- Redressing Electrodes
- Gun Arm Repairs

Materials Page

Inside this catalog, you will find that we provide different items in:

- Si3N4 - a synthetic ceramic material known for its high hardness, excellent thermal shock resistance, and chemical inertness.
- Al2O3 - a highly durable and versatile ceramic material. Its key properties include high hardness, excellent corrosion and electrical resistance, and high thermal conductivity
- Copper
  - Class 1 (CuZr) – 99.9% Pure copper - Known for its high strength and electrical conductivity, used to weld aluminum, brass, and bronze.
  - Class 2 (CuCrZr)– high strength copper alloys know for their excellent electrical conductivity. While they have lower conductivity than pure coppers.
  - Class 3 (CuNi2Be)– high strength and moderate conductivity, used in high stress application
  - Class 4 (BeCu) – high strength beryllium copper alloy with a high percentage of copper and beryllium, designed for high hardness and strength, like steel.
  - Class 20 – high strength, superior thermal and electrical conductivity
- HBSC-3 - A high-strength, high-tensile brass or manganese bronze alloy. Exhibits good ductility and wear resistance but has poor machinability and moderate corrosion resistance.
- KCF - a special alloy that forms an electrically insulating layer on its surface after a high-temperature heat treatment.
- BsBM - an alloy of copper and zinc, used in components like sockets, contact switches, and other hardware.
- ZrO2 - an advanced ceramic material prized for its strength, hardness, and wear resistance.
- Steel - an iron-carbon alloy that offers superior mechanical properties, Carbon content and heat treatment significantly influence a steel's properties, such as hardness, ductility and strength.
- Bakelite - known for being heat-resistant, electrically non-conductive, and chemically resistant
- Teflon - a versatile synthetic polymer known for its non-stick properties, chemical inertness, high temperature resistance, and low friction.

6500 Corporate Drive, Cincinnati, OH 45242 ***Tel****: 513-530-0064* ***e-mail****: info@weldparts.com*

We work for Resistance Welding!



Welding systems require precise consumables. Most North American equipment uses imperial-sized tips, shanks, and water tubes. Using metric parts in imperial equipment (or vice versa) can cause leaks, sticking, or tip loss if tapers don't match.

Weldparts USA offers both metric and imperial taper standards, ensuring proper fit and reliable performance.

Feeders: Stable & Reasonable

Since we offer a wide variety of feeders and options, there is no specific application for our feeders. Our feeders can handle anything; from any angle to any material!

EMI EMI Nut Feeder



EMI EMI Bolt Feeder

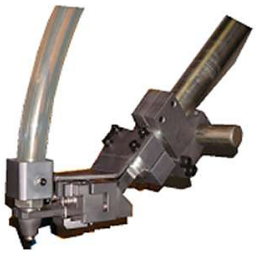



KCF Insulation Products

Weldparts USA can make KCF pins quickly and at a reasonable price!
We manufacture KCF products in the USA. Due to special technology, KCF has had to be imported from Japan. Weldparts USA has been producing KCF pins est. 2001. Now, prices are more reasonable, lead times on special shapes and sizes are more stable, exchange rate is not a concern, and technical support is available.

Tip Dresser

Here at Weldparts USA we utilize the tip dresser for our products. We stock replacement parts and even handle repairs!

Resistance Welding Accessories

We carry tip dressers with drill press', tip retractors, taper reamers, pokayoke, and so much more!

If you need something and you are not sure, send us a message on our website!



6500 Corporate Drive, Cincinnati, OH 45242 ***Tel:*** *513-530-0064* ***e-mail:*** *info@weldparts.com*

POINT HOLDERS

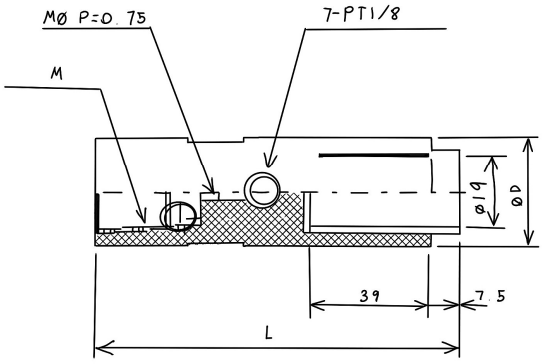

Model	øD	L	M	L1	L2	L3
PH-A1	29	90.5	NPT-1/2	48	41	41
PH-A2	29	90.5	NPT-1/2	91	54	41
PH-B1	35	96.5	NPT-3/4	95	54	48

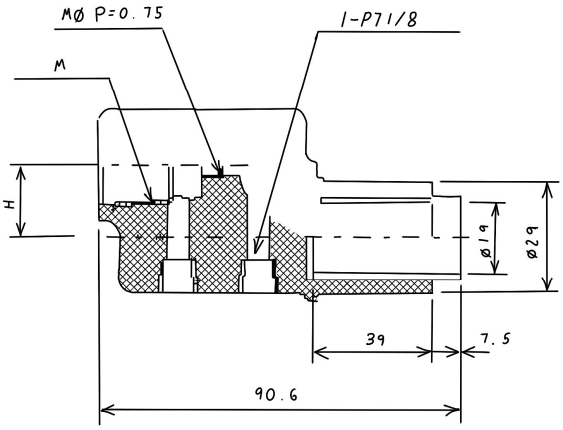

Model	H	M	L1	L2	L3
PH-C1-13	13	NPT-1/2	78	41	41
PH-C1-19	13	NPT-1/2	78	41	41
PH-C2-13	19	NPT-1/2	91	54	41
PH-C2-19	19	NPT-1/2	91	54	41

CLAMPER FOR POINT HOLDER

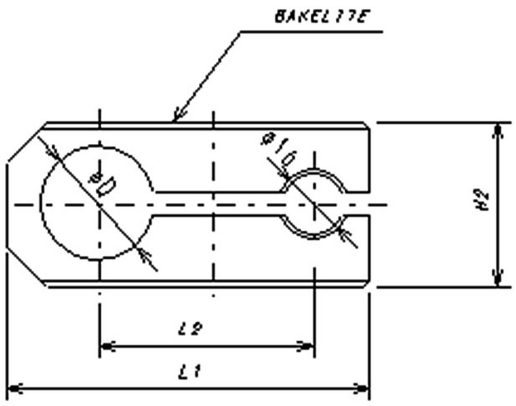

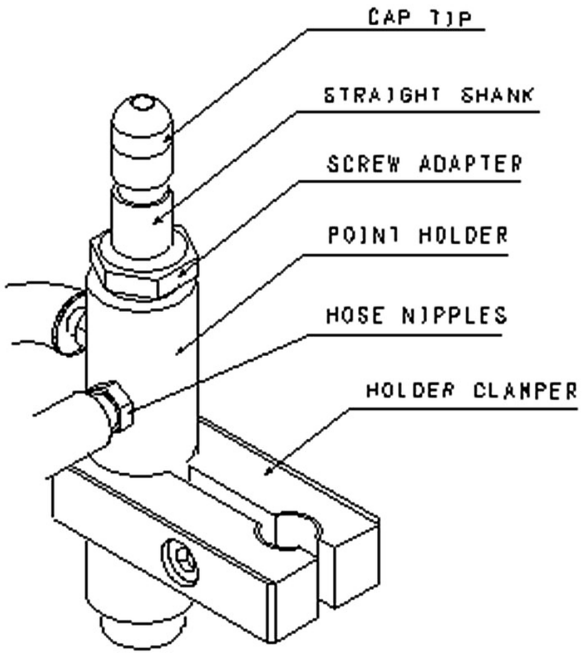

**Dimensions in metrics*

6500 Corporate Drive, Cincinnati, OH 45242 **Tel:** 513-530-0064 **e-mail:** info@weldparts.com

POINT HOLDERS CONT.

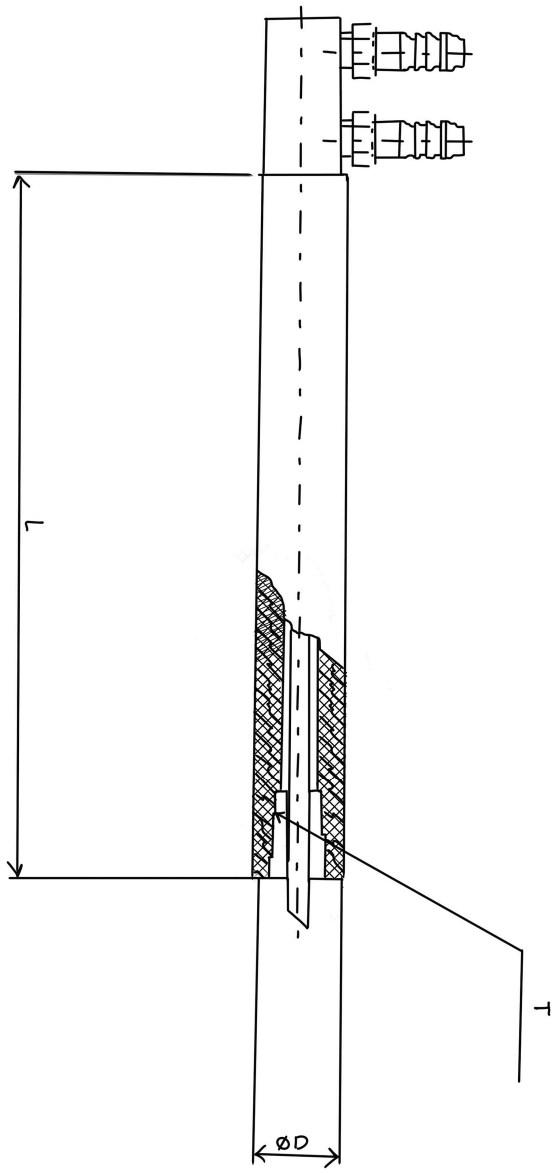

Class 2

Model	øD	L	T
PH-2520-1210	25	200	12-1/10
PH-2520-1610	25	200	16-1/10
PH-2520-MT	25	200	MT#2
PH-2525-1210	25	250	12-1/10
PH-2525-1610	25	250	16-1/10
PH-2525-MT	25	250	MT#2
PH-2530-1210	25	300	12-1/10
PH-2530-1610	25	300	16-1/10
PH-2530-MT	25	300	MT#2
PH-3220-1610	32	200	16-1/10
PH-3220-MT	32	200	MT#2
PH-3225-1610	32	250	16-1/10
PH-3225-MT	32	250	MT#2
PH-3230-1610	32	300	16-1/10
PH-3230-MT	32	300	MT#2

**Dimensions are in metrics.*

**Other taper and alloys available upon request.*

**MT#2 = 5RW(RWMA)*

**10 = metric 1/10*

6500 Corporate Drive, Cincinnati, OH 45242 ***Tel:*** *513-530-0064* ***e-mail:*** *info@weldparts.com*

POINT HOLDERS CONT.

WATER NIPPLE

BsBM

Model	G
WN1/8-11	PT1/8
WN1/4-11	PT1/4

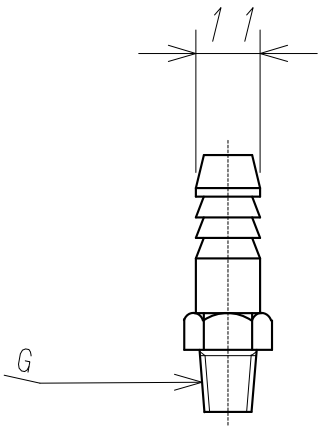

WATER CONNECTOR

BsBM

Model	G
WC2060-PS	PS-3/8
WC2060-PT	PT-3/8

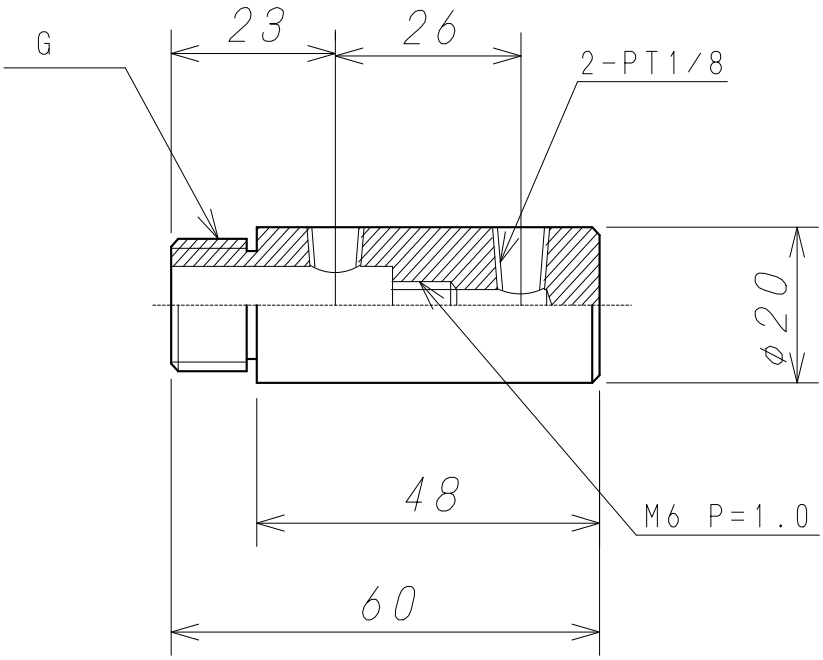

WATER TUBE

Teflon

Model	øD
Teflon Tube-6x4	6
Teflon Tube-8x6	8

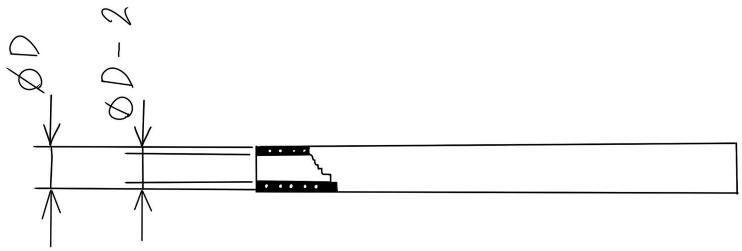

**Sold in increments of 1 meter.*

6500 Corporate Drive, Cincinnati, OH 45242 ***Tel:*** *513-530-0064* ***e-mail:*** *info@weldparts.com*

SCREW ADAPTERS

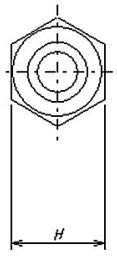

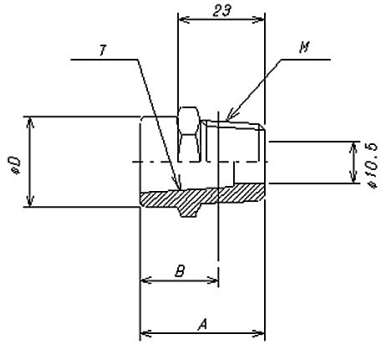

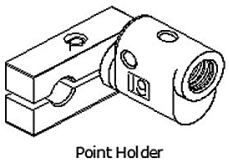

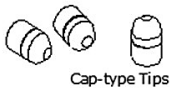

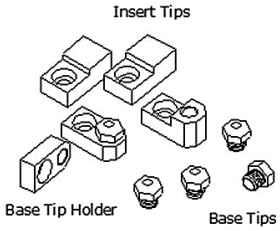

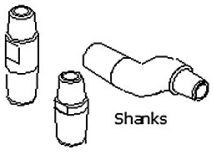

Model	A	B	øD	H	M	T
AD-B10-10	23	10	20	25	NPT-1/2	12-1/10
AD-B20-10	33	20	20	25	NPT-1/2	12-1/10
AD-B40-10	53	40	20	25	NPT-1/2	12-1/10
AD-B10-MT	23	10	20	25	NPT-1/2	MT#1
AD-B20-MT	33	20	20	25	NPT-1/2	MT#1
AD-B40-MT	53	40	20	25	NPT-1/2	MT#1
AD-A10-10	23	10	24	25	NPT-1/2	16-1/10
AD-A20-10	33	20	24	25	NPT-1/2	16-1/10
AD-A40-10	53	40	24	25	NPT-1/2	16-1/10
AD-A10-MT	23	10	24	25	NPT-1/2	MT#2
AD-A20-MT	33	20	24	25	NPT-1/2	MT#2
AD-A40-MT	53	40	24	25	NPT-1/2	MT#2
AD-D10-10	23	10	24	32	NPT-3/4	18.5-1/10
AD-D20-10	33	20	24	32	NPT-3/4	18.5-1/10

**Class 3 = BeA-50*

6500 Corporate Drive, Cincinnati, OH 45242 ***Tel:*** *513-530-0064* ***e-mail:*** *info@weldparts.com*

Measurement guide table for Threaded Adaptor

Please use this as a guide when manufacturing custom threaded adaptors.

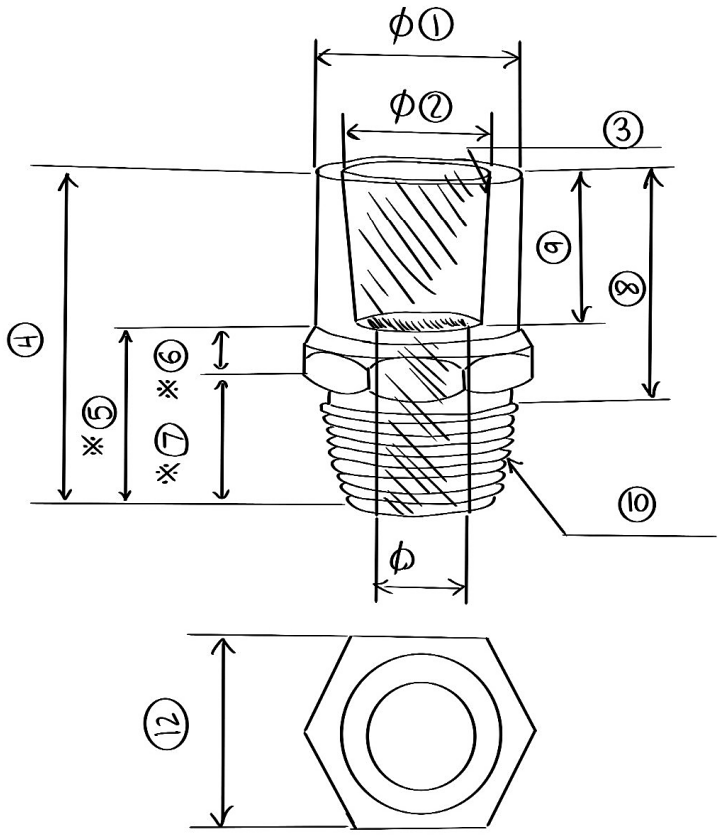

① **Outer diameter**

② **Taper reference diameter**

③ **Taper size**

④ **Length**

⑤ **Reference length**

⑥ **Wrench thickness**

⑦ **Underhead length**

⑧ **Effective length**

⑨ **Taper depth**

⑩ **Thread size**

⑪ **Water hole diameter**

⑫ **Wrench width**

6500 Corporate Drive, Cincinnati, OH 45242 **Tel:** 513-530-0064 **e-mail:** info@weldparts.com

STRAIGHT SHANKS

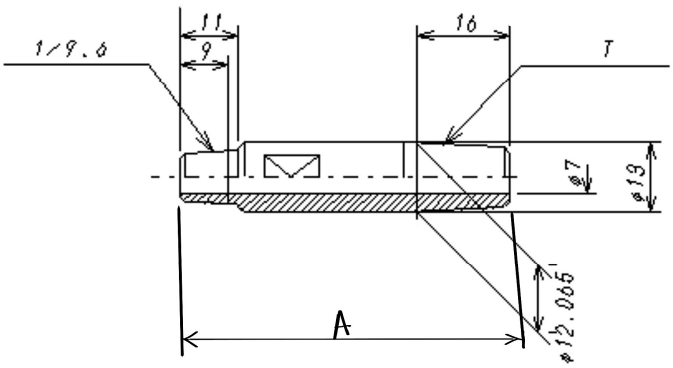

Class 4

Model	A	B	T
SH-1340-10	42	40	1-10
SH-1340-MT	42	40	MT#2
SH-1350-10	52	50	1-10
SH-1350-MT	52	50	MT#2
SH-1360-10	62	60	1-10
SH-1360-MT	62	60	MT#2
SH-1380-10	82	80	1-10
SH-1380-MT	82	80	MT#2
SH-13100-10	102	100	1-10
SH-13100-MT	102	100	MT#2

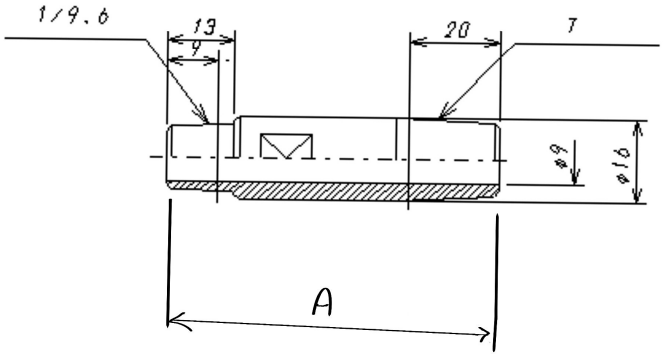

Class 4

Model	A	B	T
SH-1640-10	44	40	1-10
SH-1640-MT	44	40	MT#2
SH-1650-10	54	50	1-10
SH-1650-MT	54	50	MT#2
SH-1660-10	64	60	1-10
SH-1660-MT	64	60	MT#2
SH-1680-10	84	80	1-10
SH-1680-MT	84	80	MT#2
SH-16100-10	104	100	1-10
SH-16100-MT	104	100	MT#2
SH-16120-10	124	120	1-10
SH-16120-MT	124	120	MT#2

6500 Corporate Drive, Cincinnati, OH 45242 ***Tel:*** *513-530-0064* ***e-mail:*** *info@weldparts.com*

OFFSET SHANKS

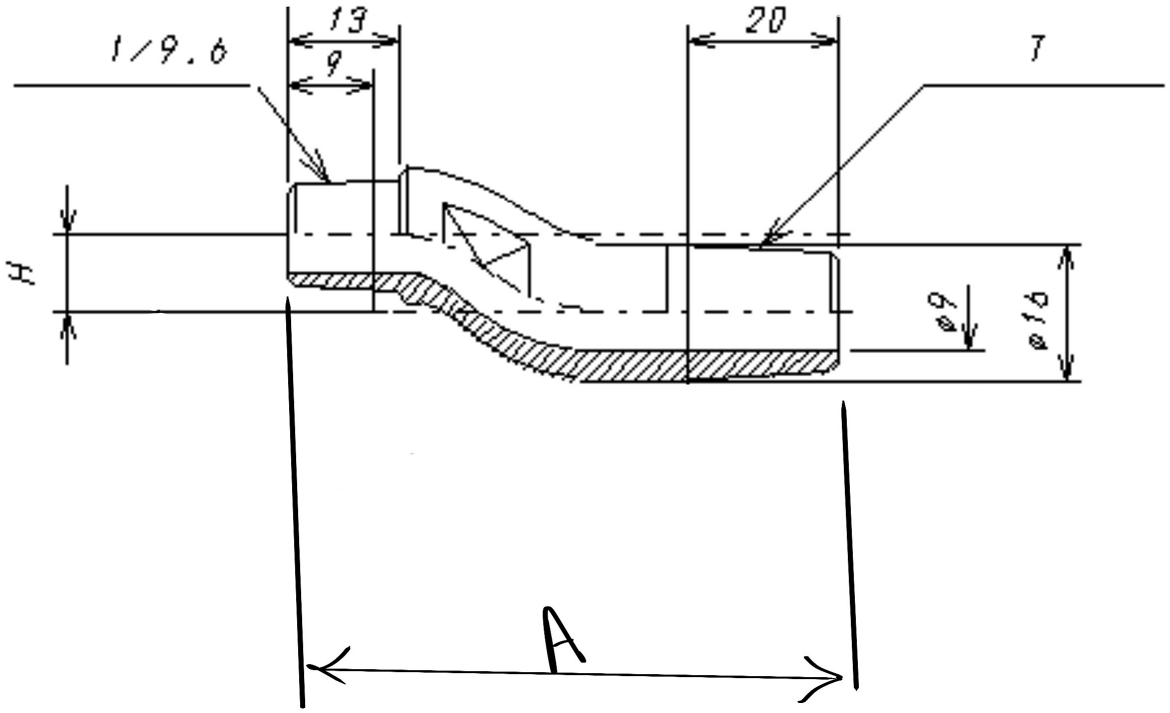

Class 4

Model	A	B	H	T
SH-1650-6-MT	53	50	6	MT#2
SH-1650-9-MT	53	50	9	MT#2
SH-1650-13-MT	53	50	13	MT#2
SH-1660-9-MT	63	60	9	MT#2
SH-1660-13-MT	63	60	13	MT#2
SH-1660-15-MT	63	60	15	MT#2
SH-1680-9-MT	83	80	9	MT#2
SH-1680-13-MT	83	80	13	MT#2
SH-1680-15-MT	83	80	15	MT#2
SH-16100-15-MT	103	100	15	MT#2
SH-16100-19-MT	103	100	19	MT#2

6500 Corporate Drive, Cincinnati, OH 45242 ***Tel:*** *513-530-0064* ***e-mail:*** *info@weldparts.com*

STRAIGHT SHANKS

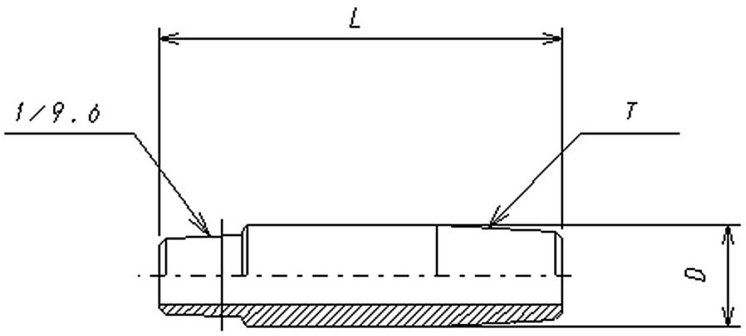

Class 2

Model	D	L	T
SH-1340-10-C	42	40	1/10
SH-1350-10-C	42	40	1/10
SH-1360-10-C	52	50	1/10
SH-1380-10-C	52	50	1/10
SH-1640-10-C	62	60	1/10
SH-1650-10-C	62	60	1/10
SH-1660-10-C	82	80	1/10
SH-1680-10-C	82	80	1/10

STEP SHANKS

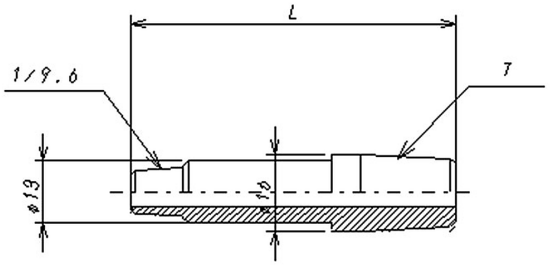

Class 2

Model	Tip	L	T
SH-1354-1610	13	54	1/10
SH-1364-1610	13	64	1/10
SH-1384-1610	13	84	1/10
SH-13104-1610	13	104	1/10

6500 Corporate Drive, Cincinnati, OH 45242 **Tel:** 513-530-0064 **e-mail:** info@weldparts.com

Measurement guide table for Shank

Please use this as a guide when manufacturing custom shanks.

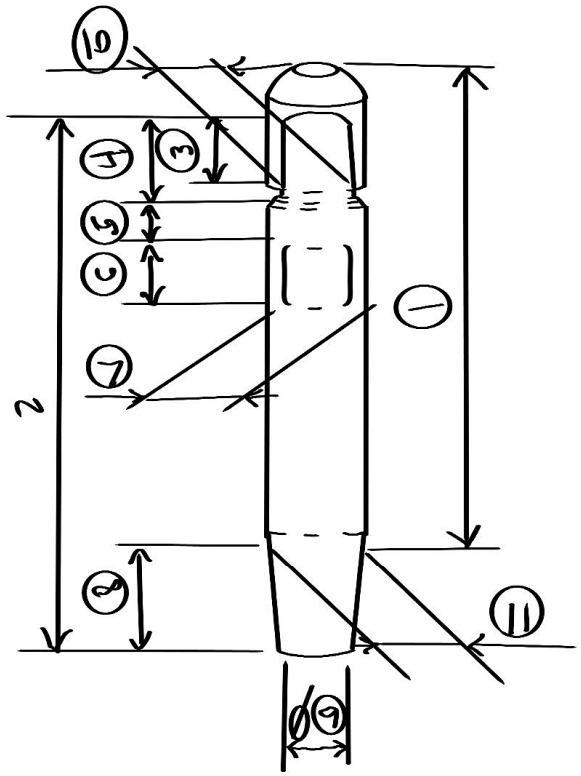

① Effective length	② Length	③ Taper effective length 1	④ Taper
⑤ Wrench start point	⑥ Wrench thickness	⑦ Outer diameter	⑧ Taper effective length 2
⑨ Water hole diameter 2	⑩ Taper size 1	⑪ Taper size 2	

6500 Corporate Drive, Cincinnati, OH 45242 **Tel:** 513-530-0064 **e-mail:** info@weldparts.com

CAP TIPS

STANDARD

Class 2

Model	øD	L	L2	ød1
CTB-13-6A	13	20	10	10.0
CTB-16-6A	16	23	11	12.6

Class 20

Model	øD	L	L2	ød1
CT-13-6A	13	20	10	10.0
CT-16-6A	16	23	11	12.6

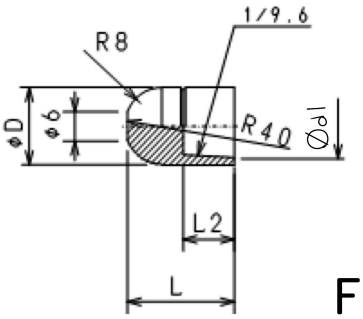

DOME

Class 2

Model	øD	L	L2	ød1
CTB-1320-D	13	20	10	10.0
CTB-1623-D	16	23	11	12.6

FLAT

Class 2

Model	øD	L	L2	ød1
CT-1320-F	13	20	10	10.0
CT-1623-F	16	23	11	12.6

Class 20

Model	øD	L	L2	ød1
CTB-1320-F	13	20	10	10.0
CTB-1623-F	16	23	11	12.6

ECCENTRIC

Class 2

Model	øD	L	L2	ød1
CT-13-6E	13	20	10	10.0
CT-16-6E	16	23	11	12.6

Class 20

Model	øD	L	L2	ød1
CTB-13-6E	13	20	10	10.0
CTB-16-6E	16	23	11	12.6

POINTED

Class 2

Model	øD	L	L2	ød1
CT-1320-P	13	20	10	10.0
CT-1623-P	16	23	11	12.6

6500 Corporate Drive, Cincinnati, OH 45242 **Tel:** 513-530-0064 **e-mail:** info@weldparts.com

Measurement guide table for Cap Tip

Please use this as a guide when manufacturing custom cap tips.
Select the tip shape from the list below and then enter the dimensions.

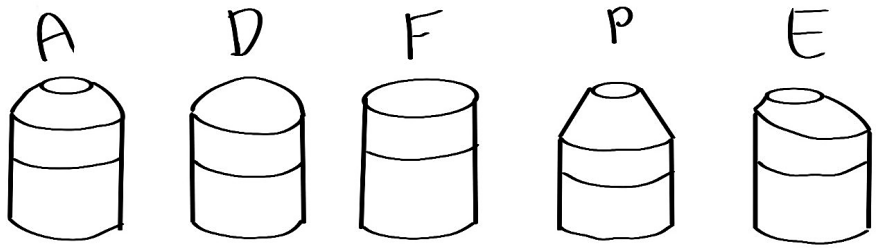

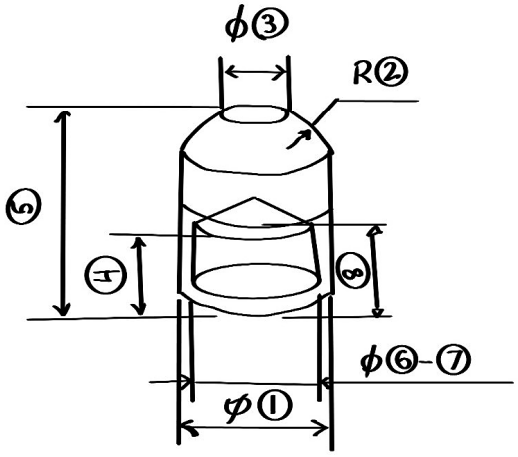

① Electrode diameter	② Tip curved surface	③ Tip diameter	④ Taper length
⑤ Length	⑥ Taper reference diameter	⑦ Taper size	⑧ Guide line position

6500 Corporate Drive, Cincinnati, OH 45242 **Tel**: 513-530-0064 **e-mail**: info@weldparts.com

BASE TIPS

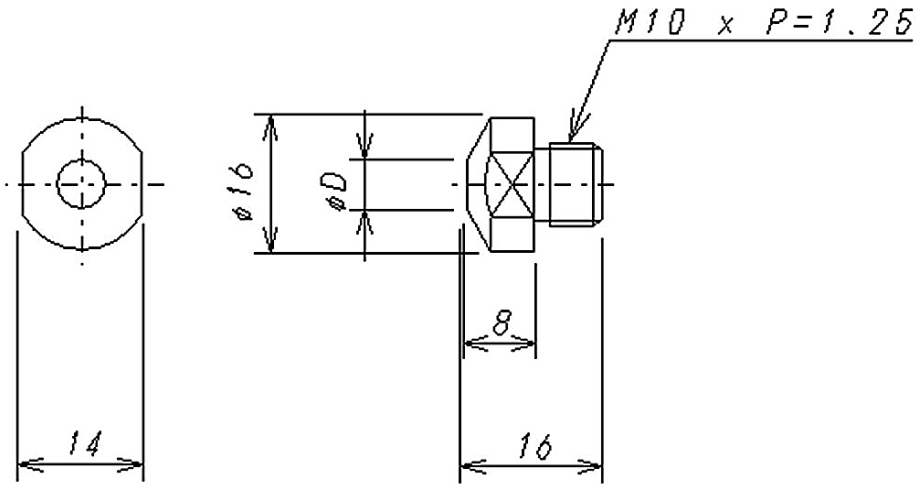

Class 2

Model	øD
BT-S1	6
BT-S2	8
BT-S3	16

INSERT ELECTRODES & HOLDERS

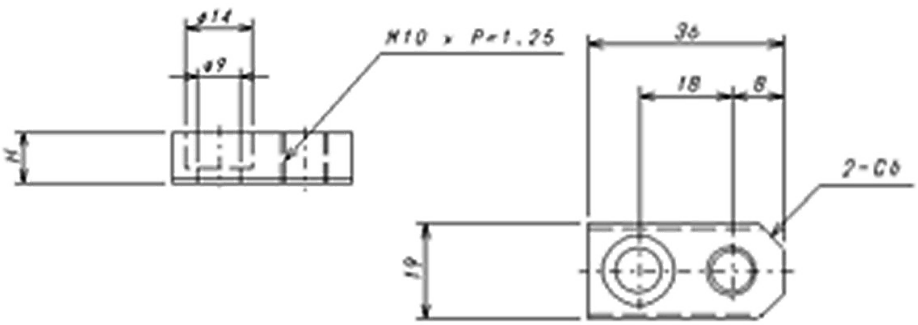

Class 3

Model	H
IN-16S	8
IN-19S	11
IN-30S	22

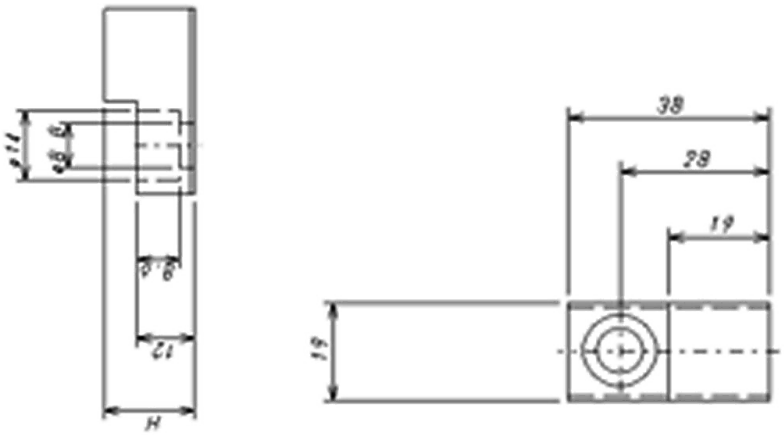

Class 2

Model	H
IN-16	16
IN-19	19

*Dimensions in metrics

6500 Corporate Drive, Cincinnati, OH 45242 **Tel:** 513-530-0064 **e-mail:** info@weldparts.com

Measurement guide table for Straight Tip

Please use this as a guide when manufacturing custom straight tip. Select the tip shape from the list below and then enter the dimensions.

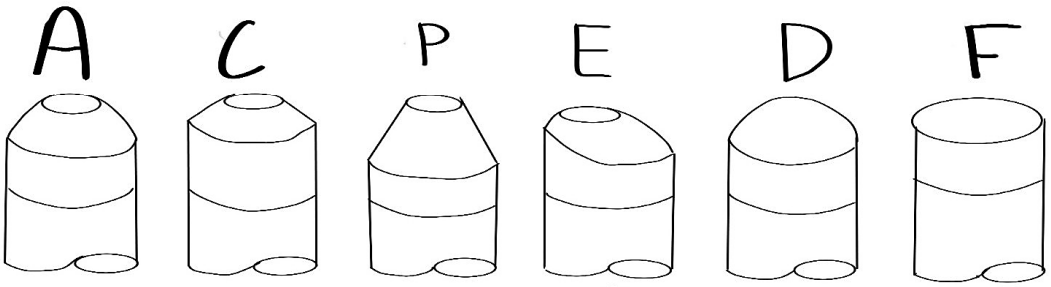

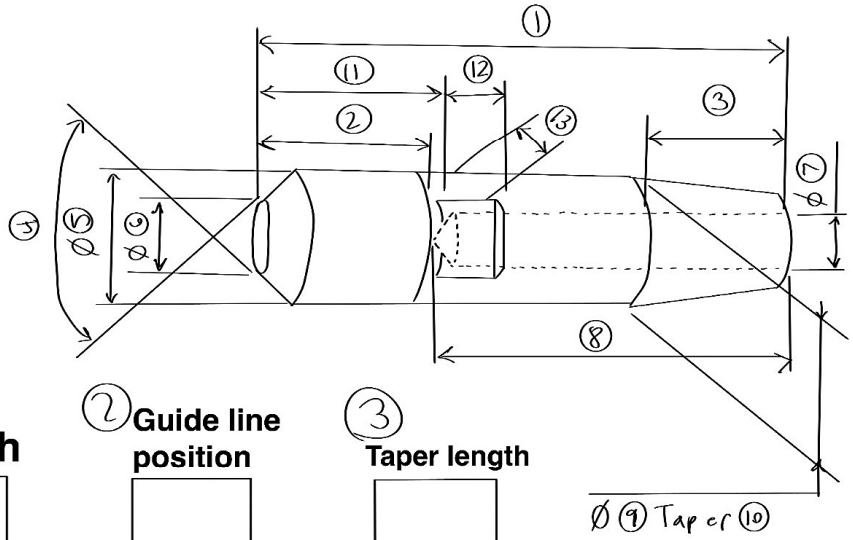

① **Length**

② **Guide line position**

③ **Taper length**

④ **Tip angle**

⑤ **Electrode diameter**

⑥ **Tip Same as for F type**

⑦ **Water hole diameter**

⑧ **Water hole depth**

⑨ **Taper reference diameter**

⑩ **Taper size**

⑪ **Wrench position**

⑫ **Wrench thickness**

⑬ **Wrench width**

6500 Corporate Drive, Cincinnati, OH 45242 ***Tel:*** *513-530-0064* ***e-mail:*** *info@weldparts.com*

L-TYPE HOLDERS

Straight

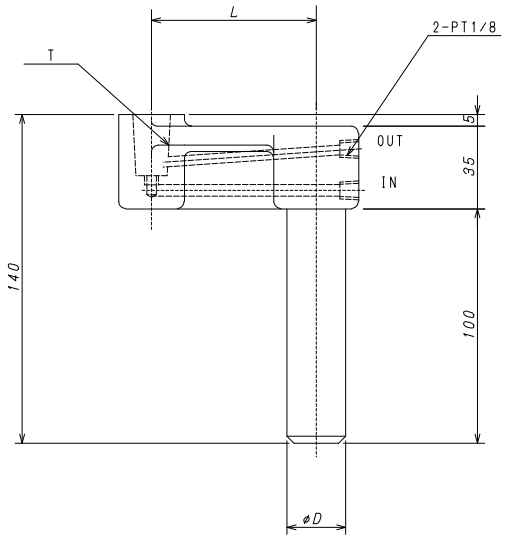

HBSC-3

Model	øD	L	T
LH2550-00-1210	25	50	12-1/10
LH2550-00-1610	25	50	16-1/10
LH2550-00-MT	25	50	MT#2
LH3250-00-1610	32	50	16-1/10
LH3250-00-MT	32	50	MT#2
LH2570-00-1210	25	70	12-1/10
LH2570-00-1610	25	70	16-1/10
LH2570-00-MT	25	70	MT#2
LH3270-00-1610	32	70	16-1/10
LH3270-00-MT	32	70	MT#2
LH25100-00-1210	25	100	12-1/10
LH25100-00-1610	25	100	16-1/10
LH25100-00-MT	25	100	MT#2
LH32100-00-1610	32	100	16-1/10
LH32100-00-MT	32	100	MT#2

6500 Corporate Drive, Cincinnati, OH 45242 ***Tel:*** *513-530-0064* ***e-mail:*** *info@weldparts.com*

L-TYPE HOLDERS

Angled

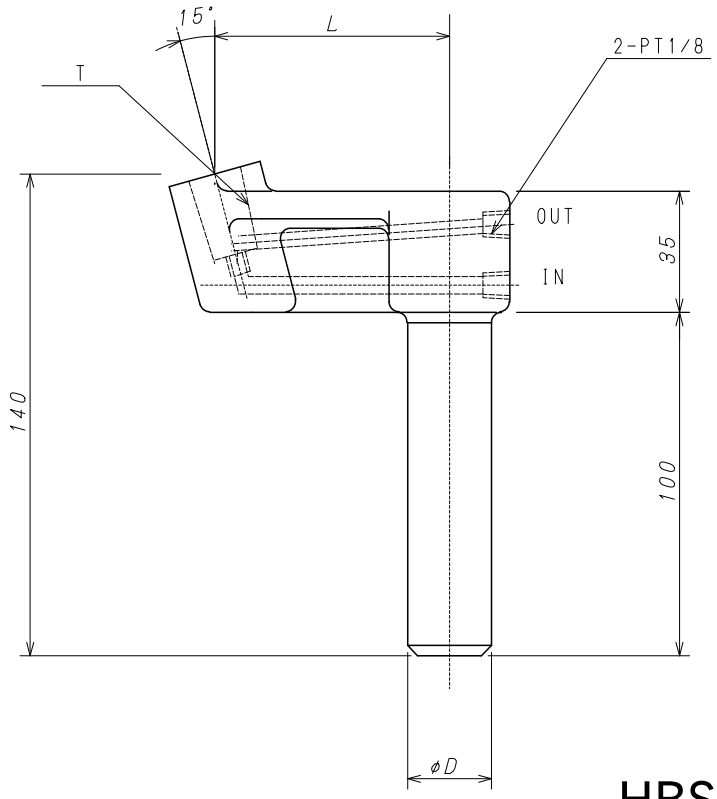

HBSC-3

Model	øD	L	T
LH2550-15-1610	25	50	16-1/10
LH2550-15-MT	25	50	MT#2
LH3250-15-1610	32	50	16-1/10
LH3250-15-MT	32	50	MT#2
LH2570-15-1610	25	70	16-1/10
LH2570-15-MT	25	70	MT#2
LH3270-15-1610	32	70	16-1/10
LH3270-15-MT	32	70	MT#2
LH25100-15-1610	25	100	16-1/10
LH25100-15-MT	25	100	MT#2
LH32100-15-1610	32	100	16-1/10
LH32100-15-MT	32	100	MT#2

6500 Corporate Drive, Cincinnati, OH 45242 ***Tel:*** *513-530-0064* ***e-mail:*** *info@weldparts.com*

PROJECTION NUT WELDING

Upper Electrodes

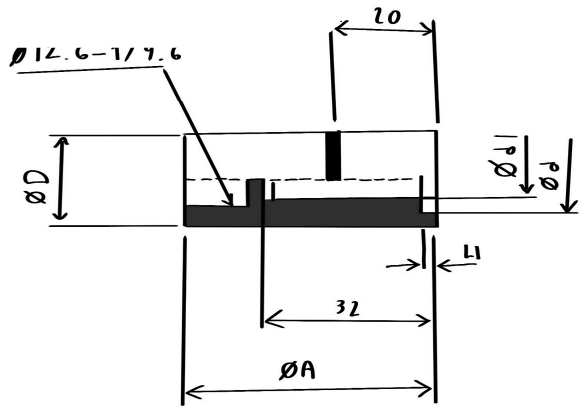

Class 2

Model	øA	ød1	L1	øD
UE-U1-0	--	8	--	16
UE-U1-10.6	10.6	8	2.0	16
UE-U1-12.3	12.3	8	2.0	16
UE-U2-14.5	14.5	8	2.0	19
UE-U3-16.8	16.8	10	3.5	25
UE-U3-17.5	17.5	10	3.5	25
UE-U4-24.0	24.0	10	4.0	30

Lower Electrodes

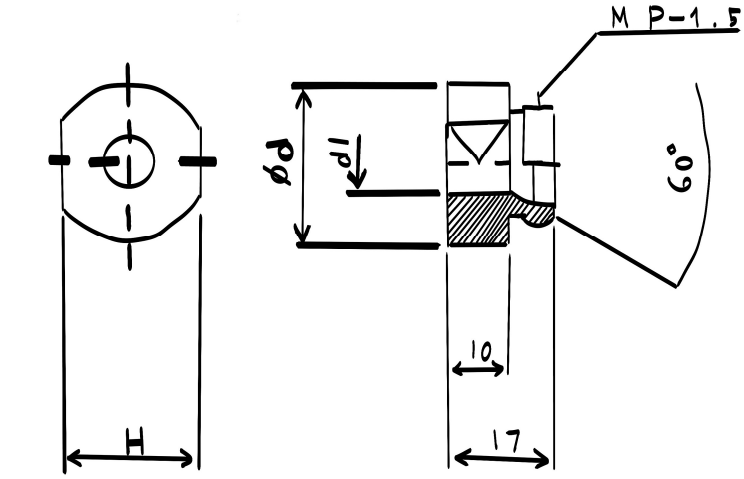

Class 2

Model	ød	H	M	D
LE-C4-5.0	5.0	22	18	25
LE-C5-6.0	6.0	22	18	25
LE-C6-6.7	6.7	22	18	25
LE-C6-7.0	7.0	22	18	25
LE-C6-8.0	8.0	22	18	25
LE-C8-9.0	9.0	22	18	25
LE-C8-10.0	10.0	22	18	25
LE-C10-11.0	11.0	27	22	30
LE-C10-12.0	12.0	27	22	30
LE-C12-13.0	13.0	27	22	30
LE-C12-14.0	14.0	27	22	30

6500 Corporate Drive, Cincinnati, OH 45242 ***Tel:*** *513-530-0064* ***e-mail:*** *info@weldparts.com*

ELECTRODE BODIES & HOLDERS

Electrode Body

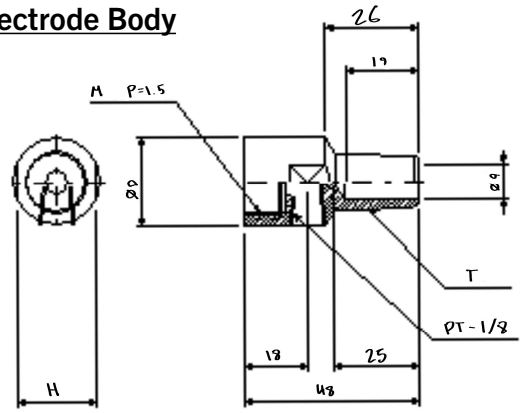

*Dimensions are in metrics.
*Other tapers and alloys available upon request.
*MT#2 = 5RW(RWMA)

Class 2

Model	D	H	M	T
EB-B1-MT	25	22	18	MT#2
EB-B1-10	25	22	18	16-1/10
EB-B2-MT	30	27	22	MT#2
EB-B2-10	30	27	22	16-1/10

Upper Electrodes
Type 1

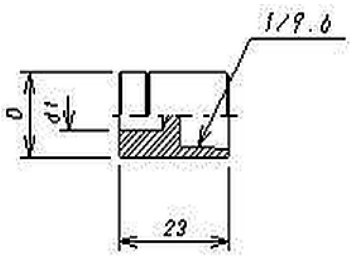

Class 2

Model	D	D1	Nut
UE16-F-5	16	5.0	M4-M6
UE16-F-8.5	16	8.5	M6-M8
UE19-F-13	19	13.0	M10-M12

Upper Electrodes
Type 2

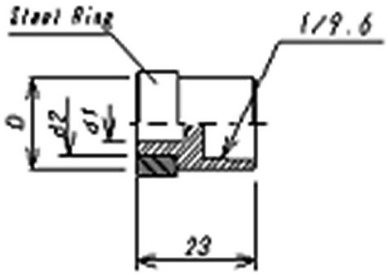

Class 2

Model	D	D1	D2
UE16-10-S	16	5.5	10
UE16-11-S	16	5.5	11
UE16-12-S	16	7.0	12
UE19-13-S	19	7.0	13
UE19-15-S	19	7.0	15
UE22-17-S	22	9.0	17

Upper Electrodes
Type 3

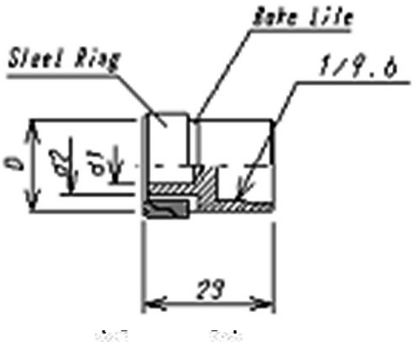

Class 2

Model	D	D1	D2
UE16-10-I	16	5.5	10
UE16-11-I	16	5.5	11
UE16-12-I	16	7.0	12
UE19-13-I	19	7.0	13
UE19-15-I	19	7.0	15
UE22-17-I	22	7.0	17

6500 Corporate Drive, Cincinnati, OH 45242 **Tel**: 513-530-0064 **e-mail**: info@weldparts.com

Measurement guide table for Lower Electrode

Please use this as a guide when manufacturing custom lower electrodes.

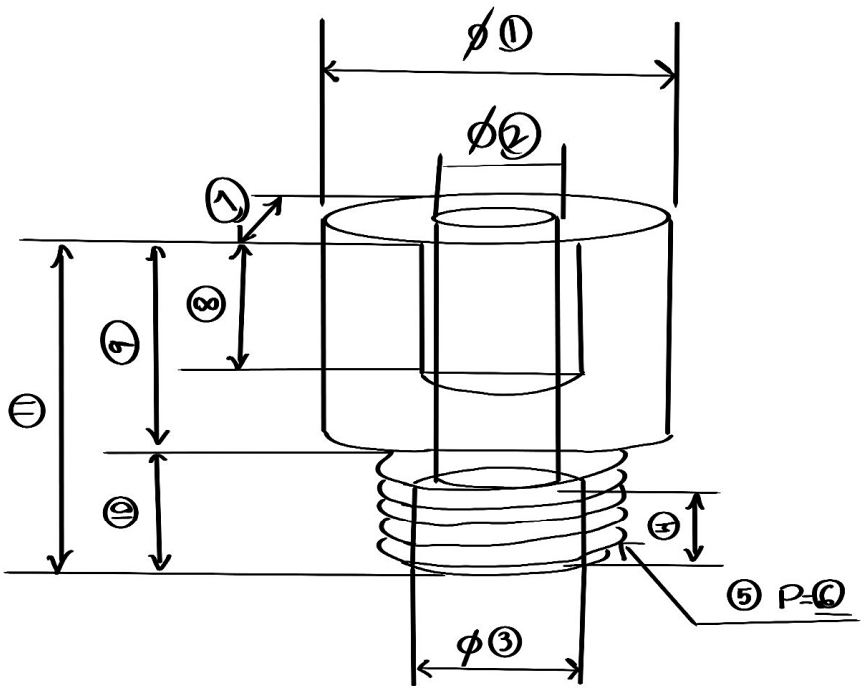

① Electrode diameter	② Hole diameter	③ Counter bore diameter	④ Counter bore hole depth
⑤ Thread size	⑥ Thread pitch	⑦ Wrench width	⑧ Wrench thickness
⑨ Electrode thickness	⑩ Thread effective length	⑪ Length	

6500 Corporate Drive, Cincinnati, OH 45242 **Tel**: 513-530-0064 **e-mail**: info@weldparts.com

KCF is Weldparts standard



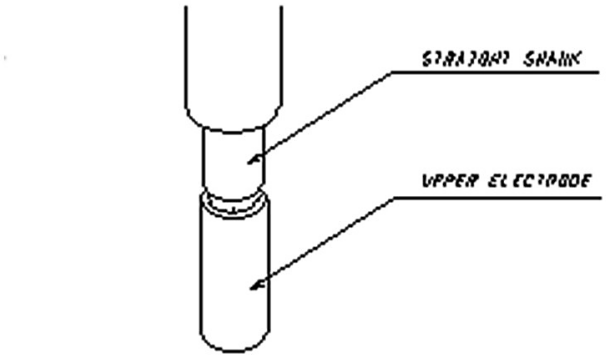

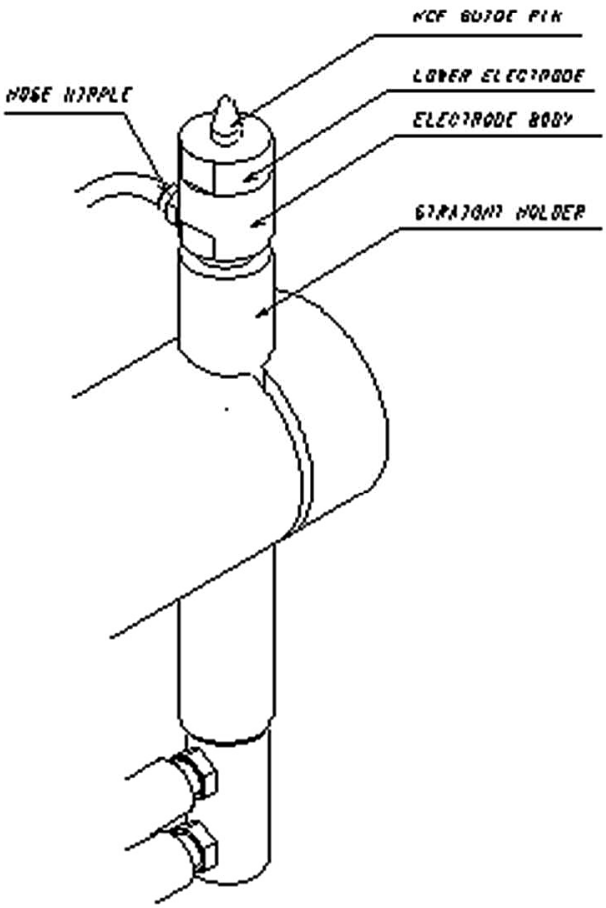

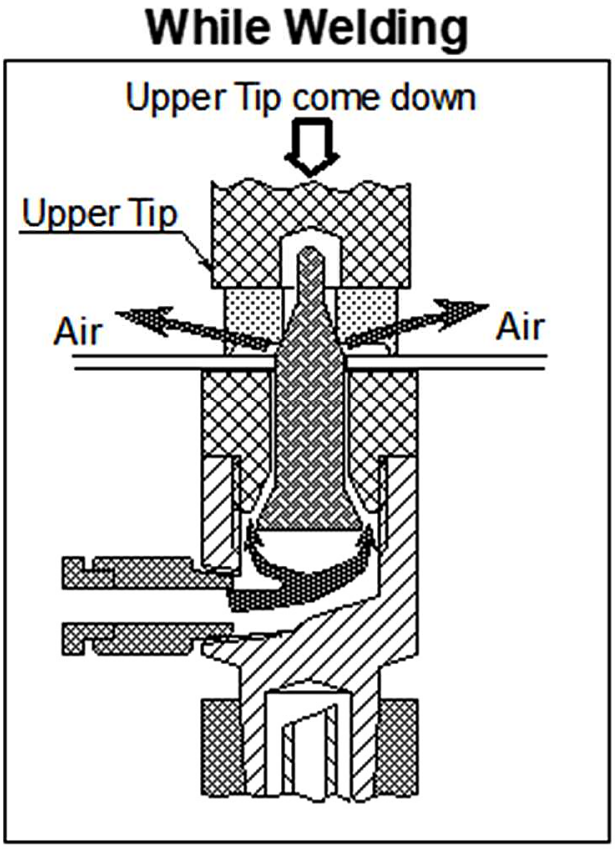

6500 Corporate Drive, Cincinnati, OH 45242 **Tel**: 513-530-0064 **e-mail**: info@weldparts.com

Aluminum Oxide Ceramic Pin



Aluminum Oxide Ceramic could be very expensive.

Aluminum oxide ceramic pins come in many shapes with a low competitive price.

The material is also completely nonconductive.

Silicon Nitride Pin (Si3N4)



Silicon Nitride ceramic pins provide a longer usage life and can absorb more of an impact.

Weldparts USA makes these pins accessible to the North American market to fit the needs of these customers.

Pin life could possibly even last forever by using certain robot cells.

Zirconium Ceramic Pin (ZrO2)



Zirconium Ceramic Pins is a high-performance material.

Zirconium is very strong; this form of material is considered high quality and protects against sliding and impact wear.

6500 Corporate Drive, Cincinnati, OH 45242 ***Tel:*** *513-530-0064* ***e-mail:*** *info@weldparts.com*

TMS Style Guide Pins

KCF

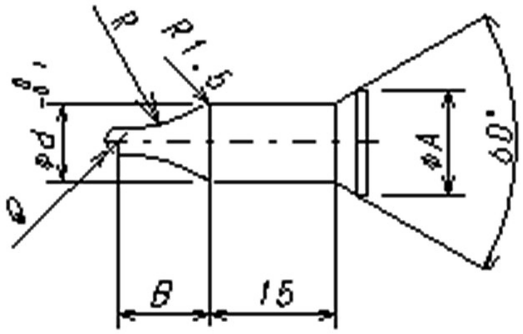

Model	Q	D	B	A
PN-4P-4.8	1.0	4.8	5.5	12
PN-5P-5.8	1.0	5.8	7.5	12
PN-6P-6.5	1.5	6.5	9.5	12
PN-6P-6.8	1.5	6.8	9.5	12
PN-6P-7.8	1.5	7.8	10.5	12
PN-8P-8.8	1.5	8.8	11.0	12
PN-8P-9.8	1.5	9.8	11.0	12
PN-10P-10.8	2.0	10.8	12.0	16
PN-10P-11.8	2.0	11.8	13.5	16
PN-12P-12.8	2.0	12.8	15.0	16
PN-12P-13.8	2.0	13.8	15.0	16

Al2O3

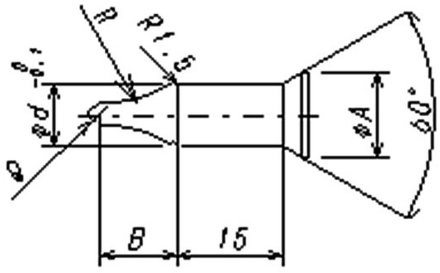

Model	Q	D	B	A
PN-6P-6.8-AL	1.8	6.8	9.5	12
PN-6P-7.8-AL	1.8	7.8	10.5	12
PN-8P-8.8-AL	1.8	8.8	11.0	12
PN-8P-9.8-AL	1.8	9.8	11.0	12
PN-10P-10.8-AL	2.0	10.8	12.0	16
PN-10P-11.8-AL	2.0	11.8	13.5	16
PN-6P-12.8-AL	2.0	12.8	15.0	16
PN-12P-13.8-AL	2.0	13.8	15.0	16

6500 Corporate Drive, Cincinnati, OH 45242 **Tel:** 513-530-0064 **e-mail:** info@weldparts.com

TMS Style Guide Pins Cont.

Si3N4

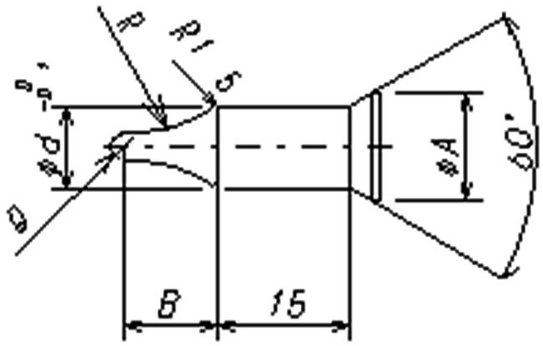

Model	Q	D	B	A
PN-5P-5.8-SN	1.0	5.8	7.5	12
PN-6P-6.8-SN	1.5	6.8	9.5	12
PN-8P-8.8-SN	1.5	8.8	11.0	12
PN-10P-10.8-SN	2.0	10.8	12.0	16

ZrO2

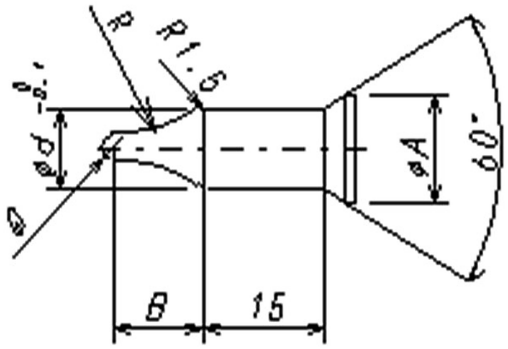

Model	Q	D	B	A
PN-5P-5.8-ZR	1.0	5.8	7.5	12
PN-6P-6.5-ZR	1.5	6.5	9.5	12
PN-6P-6.8-ZR	1.5	6.8	9.5	12
PN-6P-7.8-ZR	1.5	7.8	10.5	12
PN-8P-8.8-ZR	1.5	8.8	11.0	12
PN-8P-9.8-ZR	1.5	9.8	11.0	12
PN-10P-10.8-ZR	2.0	10.8	12.0	16

6500 Corporate Drive, Cincinnati, OH 45242 ***Tel:*** *513-530-0064* ***e-mail:*** *info@weldparts.com*

A-Style Guide Pins

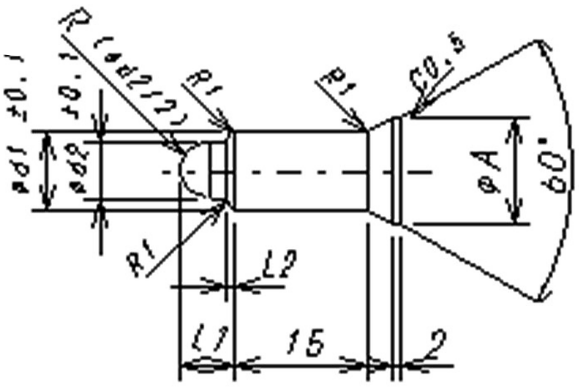

KCF

Model	D1	D2	L1	A
PN-A-5.8	5.8	4.0	5.0	12
PN-A-6.8	6.8	4.8	5.5	12
PN-A-7.8	7.8	4.8	5.5	12
PN-A-8.8-6	8.8	4.8	5.5	12
PN-A-8.8	8.8	6.5	6.0	12
PN-A-9.8	9.8	6.5	6.0	13
PN-A-10.8	10.8	8.4	9.0	16
PN-A-11.8	11.8	8.4	9.0	16
PN-A-11.8-UNF	11.8	9.6	9.5	16
PN-A-12.8	12.8	10.3	10.5	16
PN-A-13.8	13.8	10.3	10.5	16

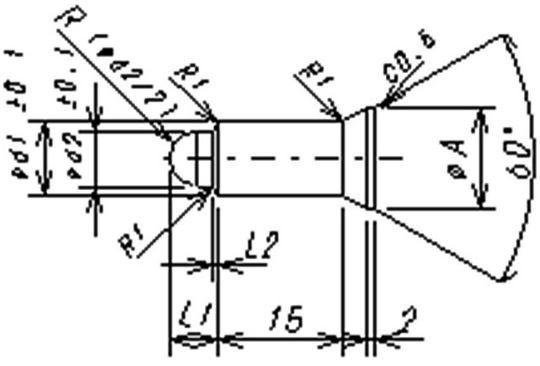

AI2O3

Model	D1	D2	L1	A
PN-A-6.8-AL	6.8	4.8	5.5	12
PN-A-7.8-AL	7.8	4.8	5.5	12
PN-A-8.8-6-AL	8.8	4.8	5.5	12
PN-A-8.8-AL	8.8	6.5	6.0	12
PN-A-9.8-AL	9.8	6.5	6.0	13
PN-A-10.8-AL	10.8	8.4	9.0	16
PN-A-11.8-AL	11.8	8.4	9.0	16
PN-A-11.8-UNF-AL	11.8	9.6	9.5	16
PN-A-12.8-AL	12.8	10.3	10.5	16
PN-A-13.8-AL	13.8	10.3	10..5	16

6500 Corporate Drive, Cincinnati, OH 45242 ***Tel:*** *513-530-0064* ***e-mail:*** *info@weldparts.com*

SKK Style Guide Pins

KCF

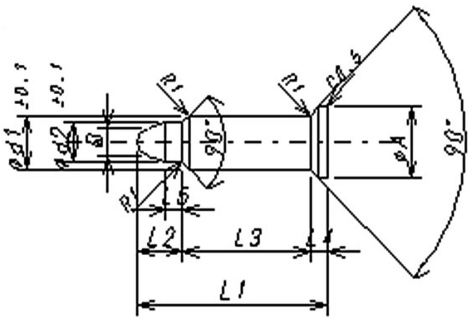

Model	D1	D3	L1	L2	L3	A
PN-SKK-M5-5.8	5.8	4.1	31	6	22	10
PN-SKK-M6-6.8	6.8	4.9	33	7	22	10
PN-SKK-M6-7.8	7.8	4.9	33	7	22	10
PN-SKK-M8-8.8	8.8	6.6	34	8	23	12
PN-SKK-M8-9.8	9.8	6.6	34	8	23	12
PN-SKK-M10-10.8	10.8	8.5	38	10	24	15
PN-SKK-UNF-11.8	11.8	9.8	38	12	24	16
PN-SKK-M12-12.8	12.8	10.4	38	12	24	16

Al2O3

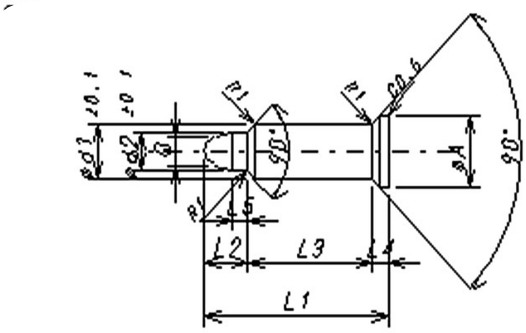

Model	D1	D2	L1	L2	L3	A
PN-SKK-M6-6.8-AL	6.8	4.9	33	7	22	10
PN-SKK-M6-7.8-AL	7.8	4.9	33	7	22	10
PN-SKK-M8-8.8-AL	8.8	6.6	34	8	23	12
PN-SKK-M8-9.8-AL	9.8	6.6	34	8	23	12
PN-SKK-M10-10.8-AL	10.8	8.5	38	10	24	15
PN-SKK-UNF-11.8-AL	11.8	9.8	38	12	24	16
PN-SKK-M12-12.8-AL	12.8	10.4	38	12	24	16

ZrO2

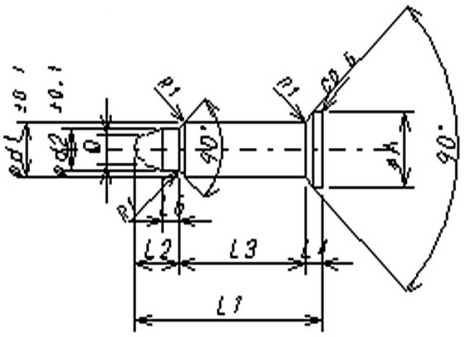

Model	D1	D2	L1	L2	L3	A
PN-SKK-M5-5.8-ZR	5.8	4.1	31	6	22	10
PN-SKK-M6-6.8-ZR	6.8	4.9	33	7	22	10
PN-SKK-M6-7.8-ZR	7.8	4.9	33	7	22	10
PN-SKK-M8-8.8-ZR	8.8	6.6	34	8	23	12
PN-SKK-M8-9.8-ZR	9.8	6.6	34	8	23	12
PN-SKK-M10-10.8-ZR	10.8	8.5	38	10	24	15

6500 Corporate Drive, Cincinnati, OH 45242 ***Tel:*** *513-530-0064* ***e-mail:*** *info@weldparts.com*

Measurement guide table for Guide Pin

Please use this as a guide when manufacturing custom guide pins.
Select the tip shape from the list below and then enter the dimensions.

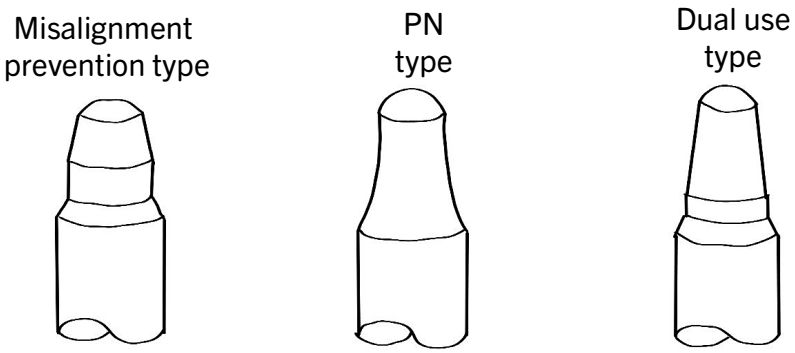

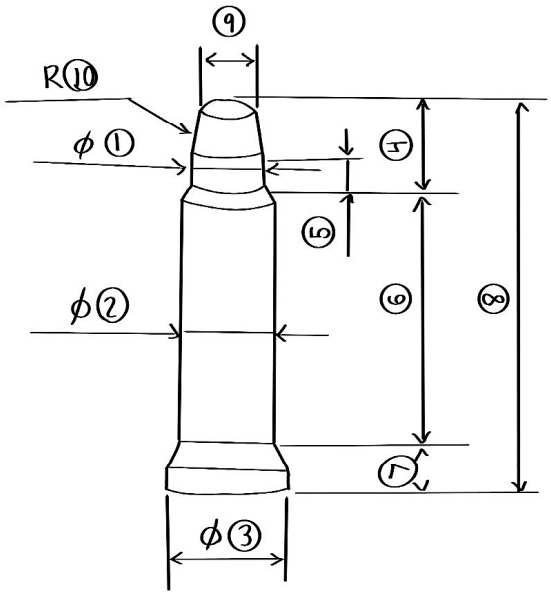

① Nut fits part diameter	② Pin diameter	③ Root diameter	④ Pin tip length	⑤ Nut fits part diameter

⑥ Pin length	⑦ Root length	⑧ Length	⑨ Pin tip diameter

6500 Corporate Drive, Cincinnati, OH 45242 **Tel**: 513-530-0064 **e-mail**: info@weldparts.com

Shunt

Order your own Shunt:

Type: C, F, or J

Outside Length (OL)

Width (W)

Thickness (T)

Hole Pattern

Hole Location (X,Y,Z)

Hole Diameter



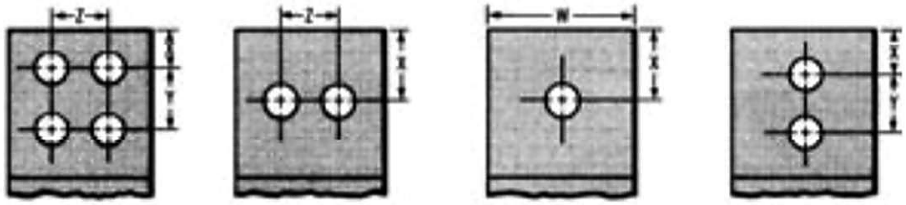

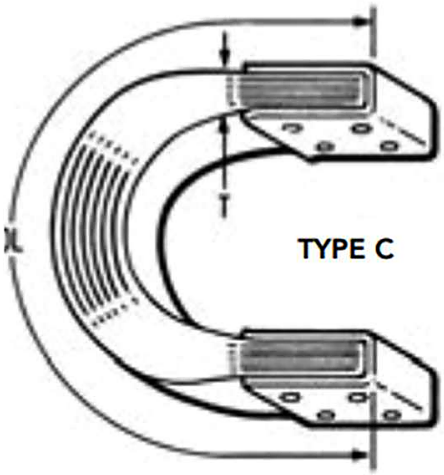

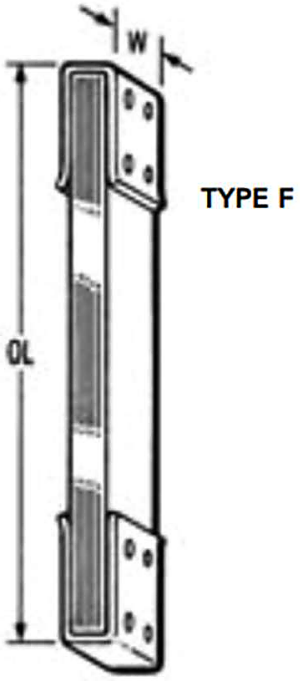

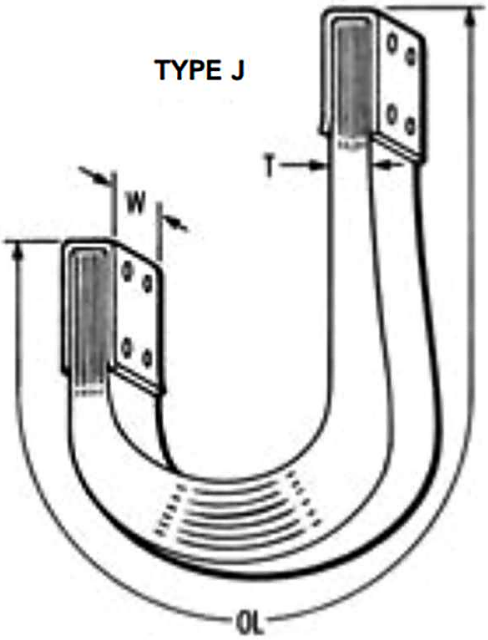

6500 Corporate Drive, Cincinnati, OH 45242 **Tel:** 513-530-0064 **e-mail:** info@weldparts.com

Measurement guide table for Ounce Copper Plate

(both shunt and secondary conductors)

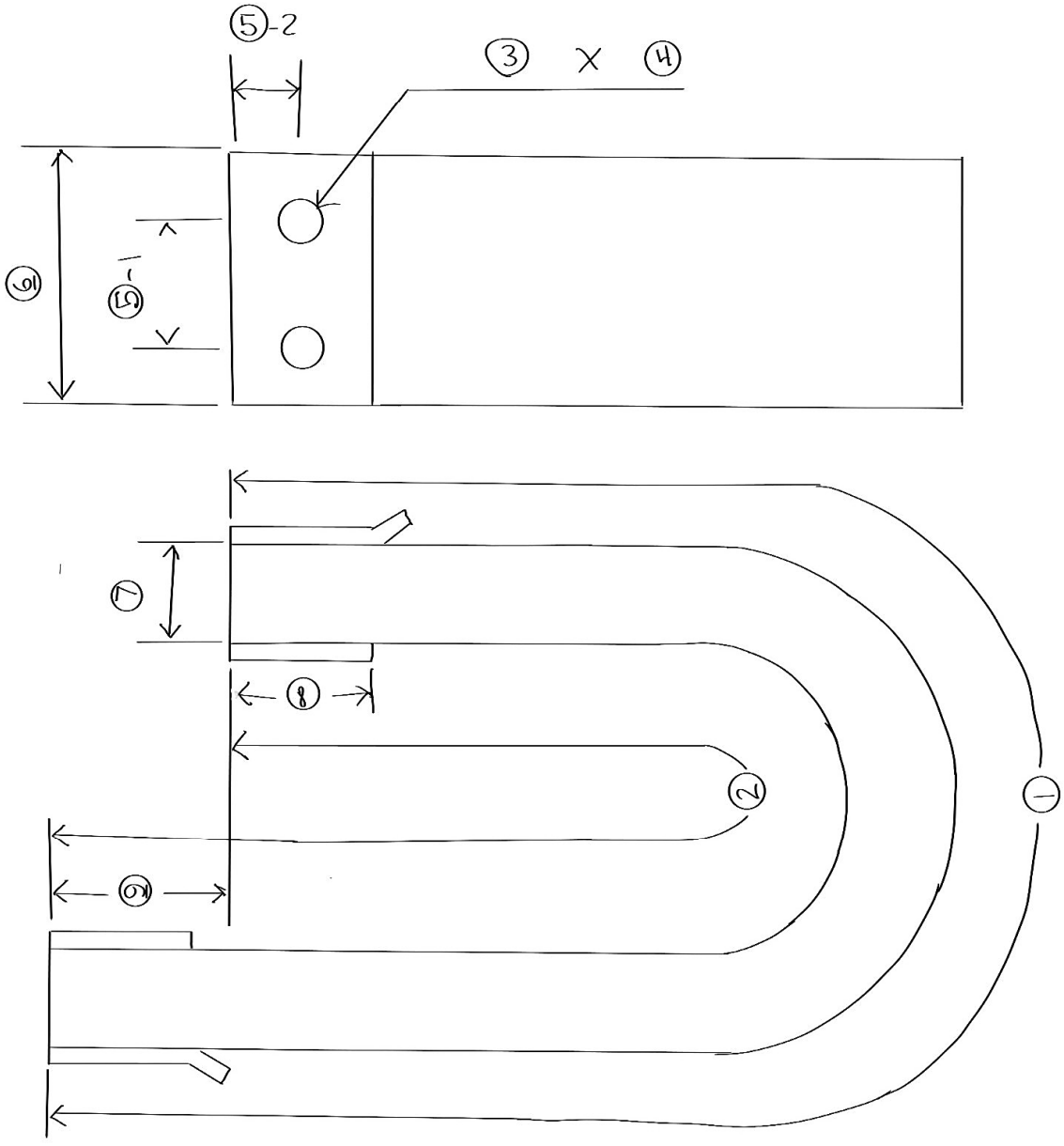

① Outer circumference length	② Inner circumference length	③ Bolt fastening 2 or 4 holes	④ Hole ϕ or bolt size	⑤-2 Pitch 2	⑥ Width	⑦ Thickness	⑧ Caulking length	⑨ Displacement dimensions when open

⑤-1 Pitch 1

6500 Corporate Drive, Cincinnati, OH 45242 **Tel**: 513-530-0064 **e-mail**: info@weldparts.com

Cables

Order your own Cable:

Conductor Rating (MCM)

Length between holes

Terminal Orientation Style

DIMENSIONS, INCHES			
MCM Rating	O.D. (approx.)	Lug Width A	Lug Thickness B
600	1-5/8	1-3/8	.50
750	1-3/4	1-3/8	.60
1000	2	1-1/2	.70
1200	2-1/8	1-1/2	.82
1500	2-1/4	1-1/2	.99

Wire Gauges Size & Wire Ampacity Table

3/0 Gauge	**200 AMPS** Service Entrance - From Utility Pole to Energy Meter
1/0 Gauge	**150 AMPS** Service Entrance & Feeder Wire - To Panel Box
3 Gauge	**100 AMPS** Service Entrance & Feeder Wire - To Panel Box
6 Gauge	**55 AMPS** Feeder & Large Appliance Wire
8 Gauge	**40 AMPS** Feeder & Large Appliance Wire
10 Gauge	**30 AMPS** Appliances e.g. Dryer, Air-conditioning, Water Heater
12 Gauge	**20 AMPS** Appliances like Laundry, Bathroom & Kitchen Circuits
14 Gauge	**15 AMPS** General Lighting, Fans & Outlet / Receptacle Circuits

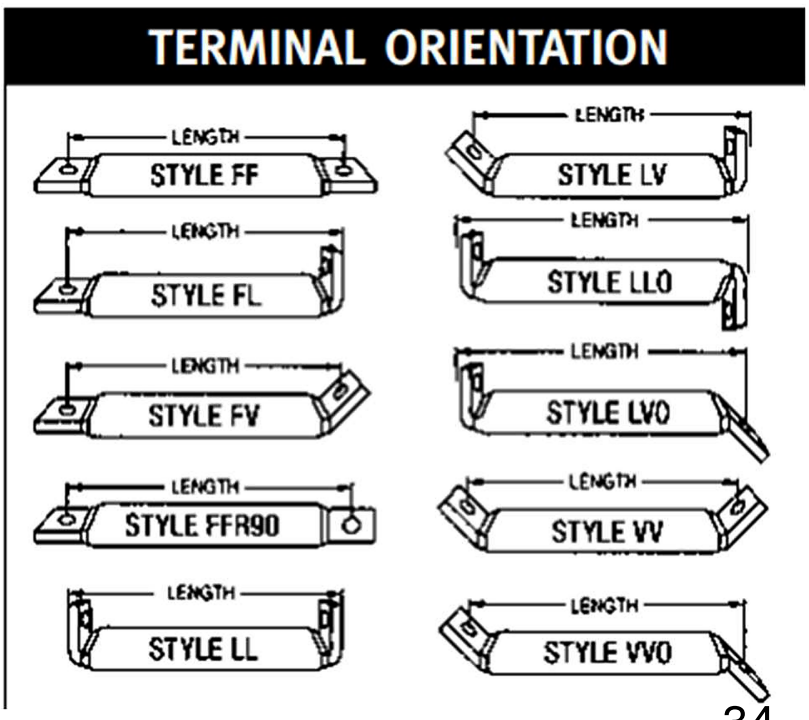

6500 Corporate Drive, Cincinnati, OH 45242 **Tel**: 513-530-0064 **e-mail**: info@weldparts.com

ACCESSORIES

Description	Item #	Remark
Tip Remover	TR-1-13	for 13 dia. cap tip
Tip Remover	TR-1-16	for 16 dia. cap tip
Tip Remover	TR-2	multiple type



Description	Item #	Remark
Taper Reamer	TRMF-1201	12 dia – 1/10
Taper Reamer	TRMF-MT#1	12 dia MT#1
Taper Reamer	TRMF-1601	16 dia – 1/10
Taper Reamer	TRMF-MT#2	16 dia MT#2



Description	Item #	Remark
Jet-Lube	SS-30	237g



6500 Corporate Drive, Cincinnati, OH 45242 ***Tel:*** *513-530-0064* ***e-mail:*** *info@weldparts.com*

TIP REMOVER (TR-2)

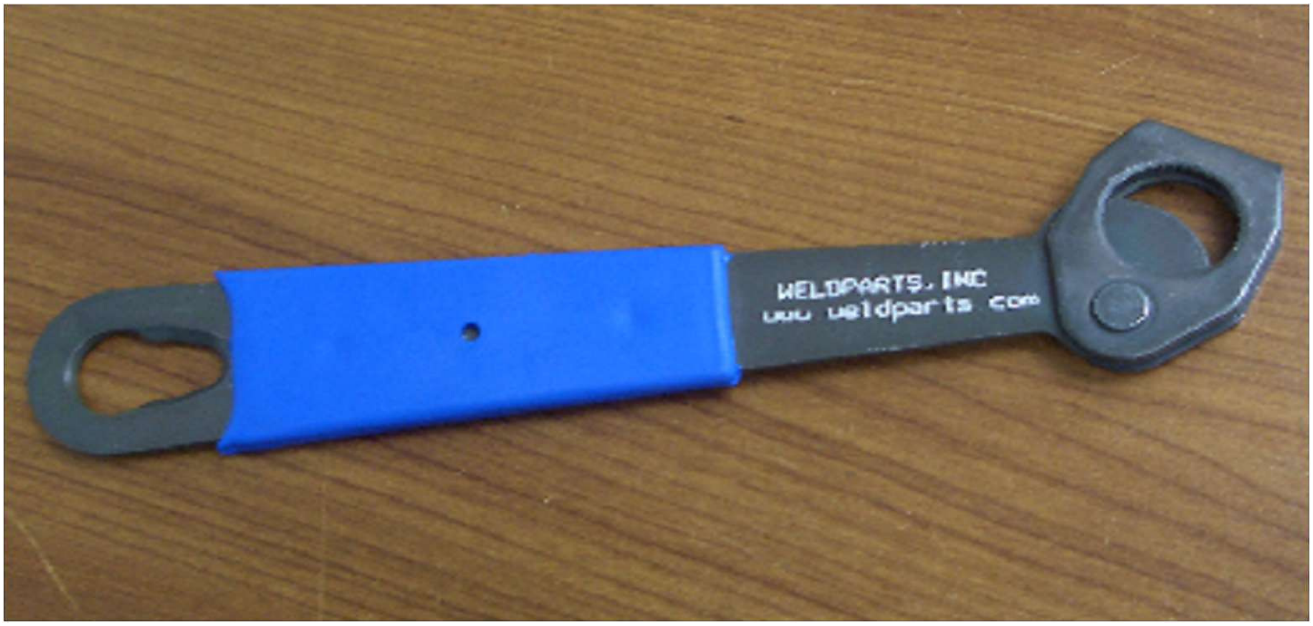

Easy to Use!

Just twist or pop off.

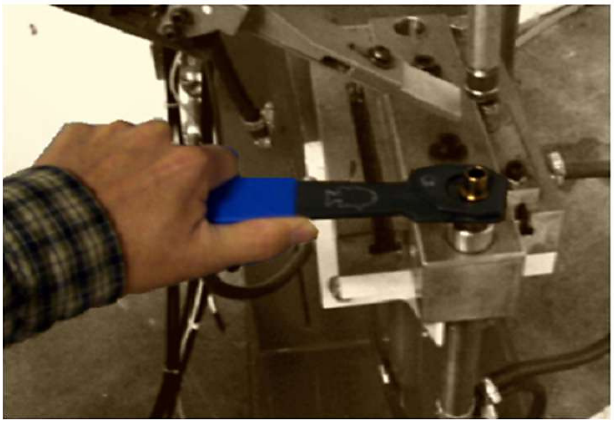

Remove Shank- Twist
1/2 to 7/8 [12mm-22mm]



Remove Cap Tip – Pop
1/2 to 5/8 [13mm-16mm]

6500 Corporate Drive, Cincinnati, OH 45242 **Tel:** 513-530-0064 **e-mail:** info@weldparts.com

TIP DRESSER

Our tip dresser is our longest selling product because of its high torque and its high quality.

- Many different diameter electrode tips can be dressed.
- Many have been sold because of their consistent high quality.
- Simple operation and quick tip dressing.

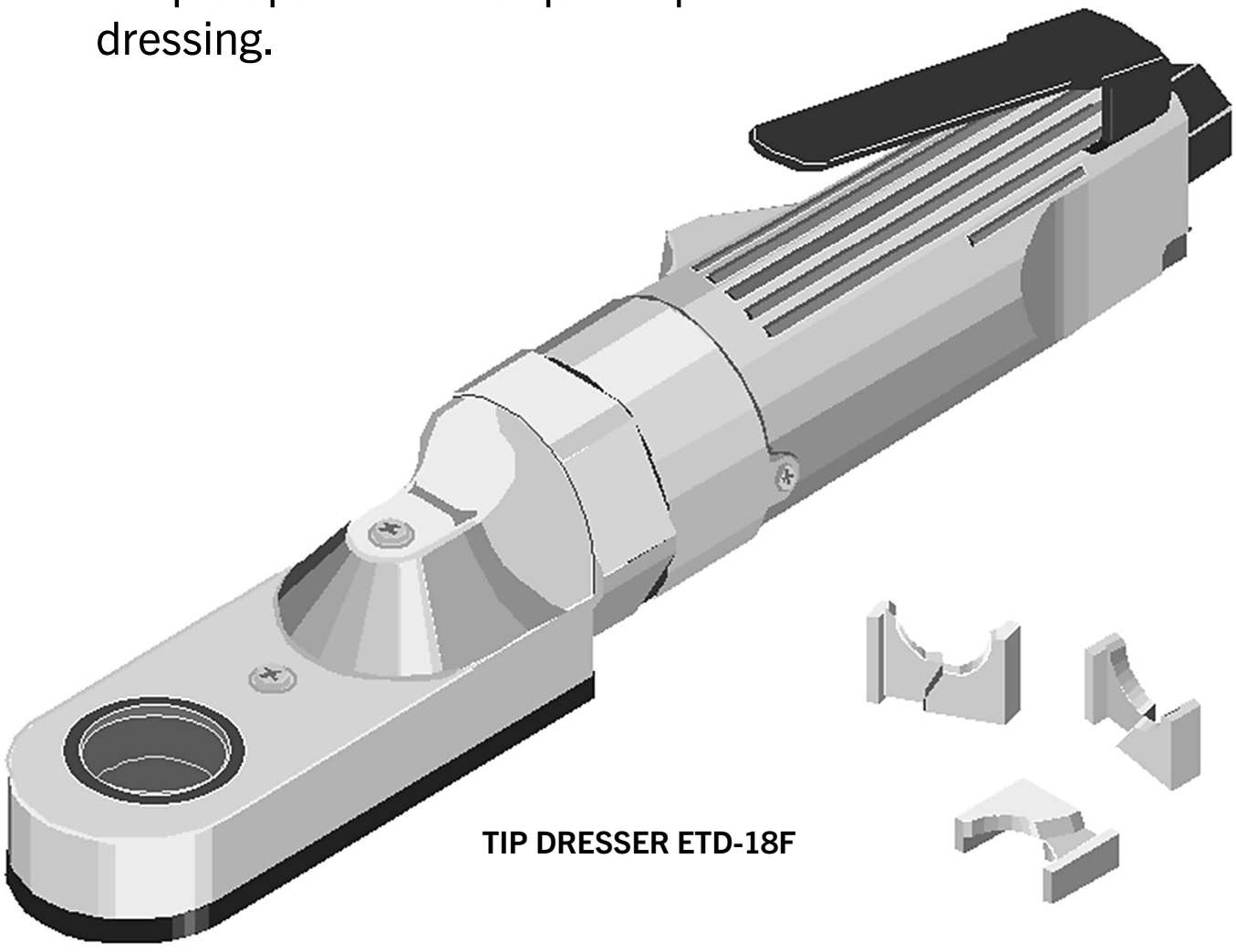

TIP DRESSER ETD-18F

6500 Corporate Drive, Cincinnati, OH 45242 ***Tel:*** *513-530-0064* ***e-mail:*** *info@weldparts.com*

CUTTER BLADES

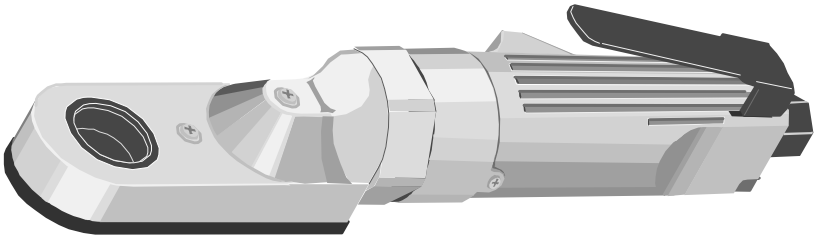

Specification

Model No. :	ETD-18F
Capacity Tip Size(mm) :	10 to 18 dia
Free Speed(r.p.m) :	1,300
Overall Length(mm) :	290
Net Weight(kg) :	1.6
Air Consu,(m^3/min) :	0.2
Air Inlet(PT) :	1/4
Air Hose(ID) :	3/8

USA size Cutter Blades
ETD-18F-3

Japan size Cutter Blades
ETD-18F

Tip Dresser
ETD-18F
(ETD-18F-3)

CUTTER CASE

Model No.	Tip Size (A) mm
ETD-0-10	10 dia
ETD-0-12	12 dia
ETD-0-13	13 dia
ETD-0-16	16 dia
EDT-0-18	18 dia
ETD-3-12	12 dia
ETD-3-13	13 dia
ETD-3-16	16 dia

Top size (D)

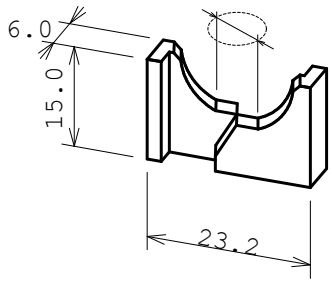

STANDARD TYPE CUTTER BLADE

Model No.	Style mm	Top Size (D)
KM1-6.5R	Radius 6.5	-
KM1-8R	Radius 8.0	-
KM1-6-8R	Radius 8.0	6.0
KM1-6-90	Corn 90	6.0
KM1-5-120	Corn 120	5.0
KM1-40R	Radius 40.0	-

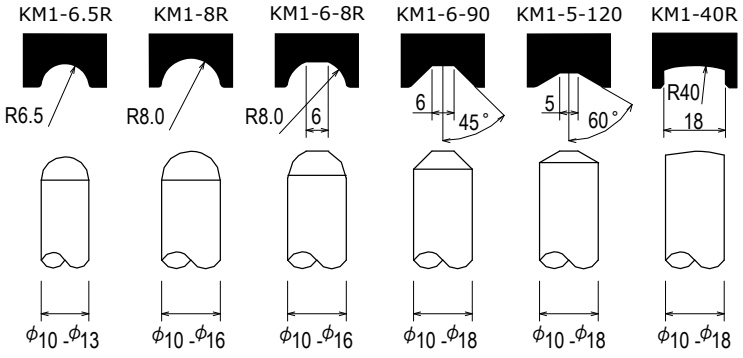

6500 Corporate Drive, Cincinnati, OH 45242 ***Tel****: 513-530-0064* ***e-mail****: info@weldparts.com*

CUTTER BLADES CONT.

Tip Style

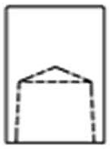

Flat
"F" Nose

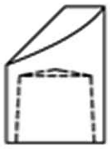

Eccentric
"E" Nose

KM1-xx

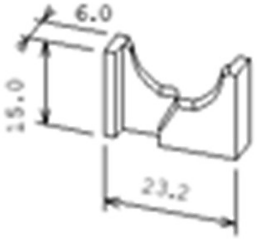

KM3-xx (BF-xx)

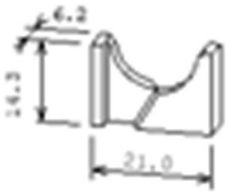

* Same size cutter blade as ARO, Yokota.

*Same size cutter as MMM, Kyokuto, EDI

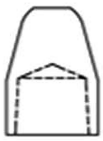

Pointed
"P" Nose

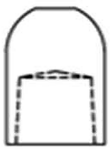

Domed
"D" Nose



Cone
"C" Nose

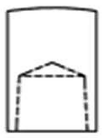

Radius
"R" Nose

Model	Tip Size	Style
KM1-6-60	13-16	P
KM1-6-8R	13 – 16	D
KM3-6.5R	13	D
KM3-8R	16	D
KM1-6-90	13 – 16	C
KM1-5-120	13 – 16	C
KM1-40R	13 – 16	R
KM3-40R	13 - 16	R

*"A" = Standard 6mm weld face

*KM3 = same size cutter as MMM, Kyokuto, EDI

6500 Corporate Drive, Cincinnati, OH 45242 **Tel:** 513-530-0064 **e-mail:** info@weldparts.com

CUTTER BLADES CONT.

KM7-xx (BE-xx)

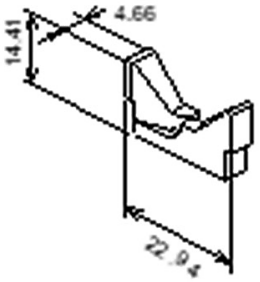

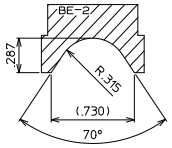

BE-2

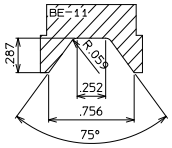

BE-11

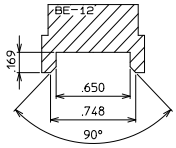

BE-12

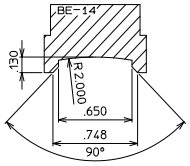

BE-14

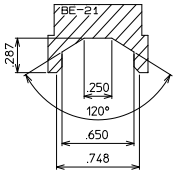

BE-21

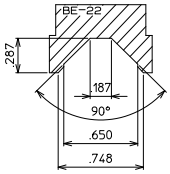

BE-22

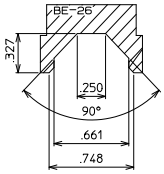

BE-26

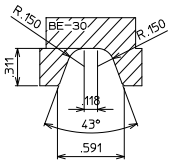

BE-30

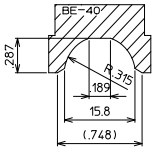

BE-40

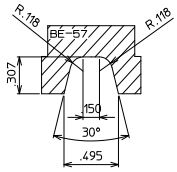

BE-57

KM3-xx (BF-xx)

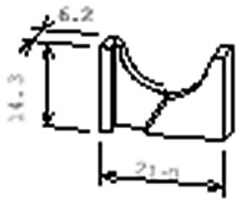

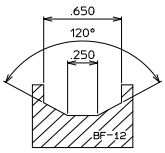

BF-2

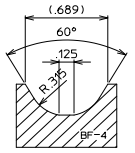

BF-4

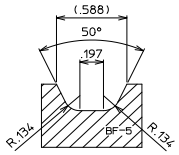

BF-5

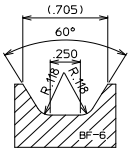

BF-6

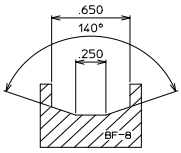

BF-8

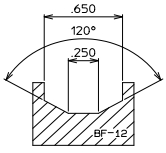

BF-12

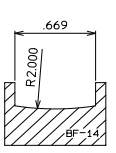

BF-14

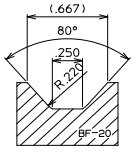

BF-20

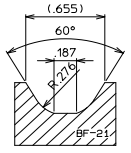

BF-21

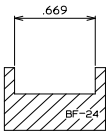

BF-24

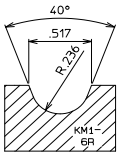

KM1-6R

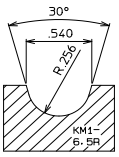

KM1-6.5R

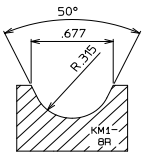

KM1-8R

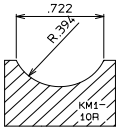

KM1-10R

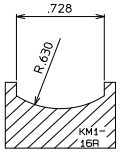

KM1-16R

KM1-xx

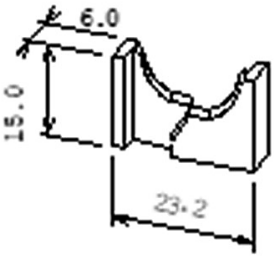

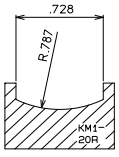

KM1-20R

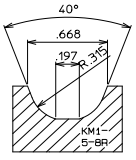

KM1-5-8R

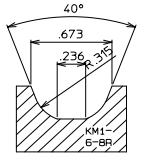

KM1-6-8R

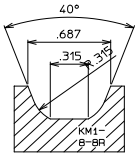

KM1-8-8R

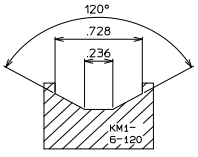

KM1-6-120

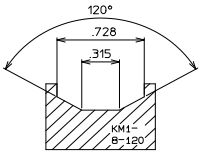

KM1-8-120

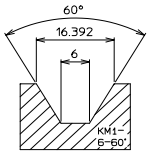

KM1-6-60

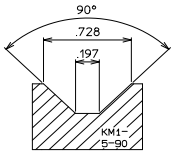

KM1-5-90

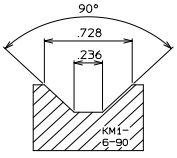

KM1-6-90

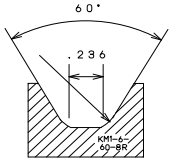

KM1-6-60-8R

6500 Corporate Drive, Cincinnati, OH 45242 **Tel**: 513-530-0064 **e-mail**: info@weldparts.com

CUTTER BLADES CONT.

TWO-SIDED CUTTER BLADES

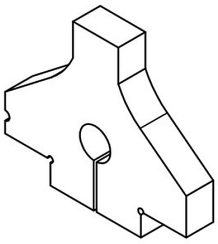

KTW-135-HT

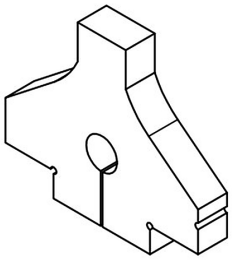

KTW-135-5

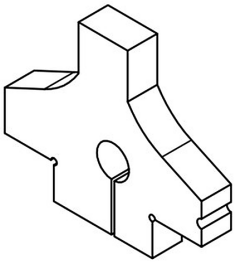

KTW-13G-HT

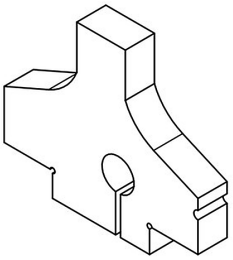

KTW-13G-C3

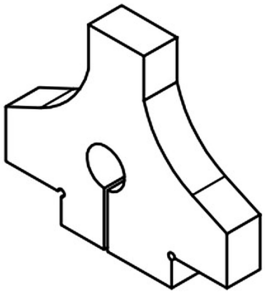

KTW-12G-HT

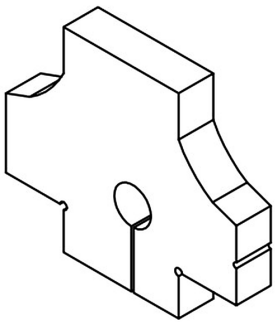

KTW-12-13G

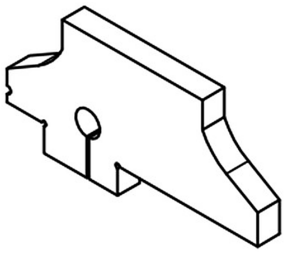

KTW(U)-121-HT

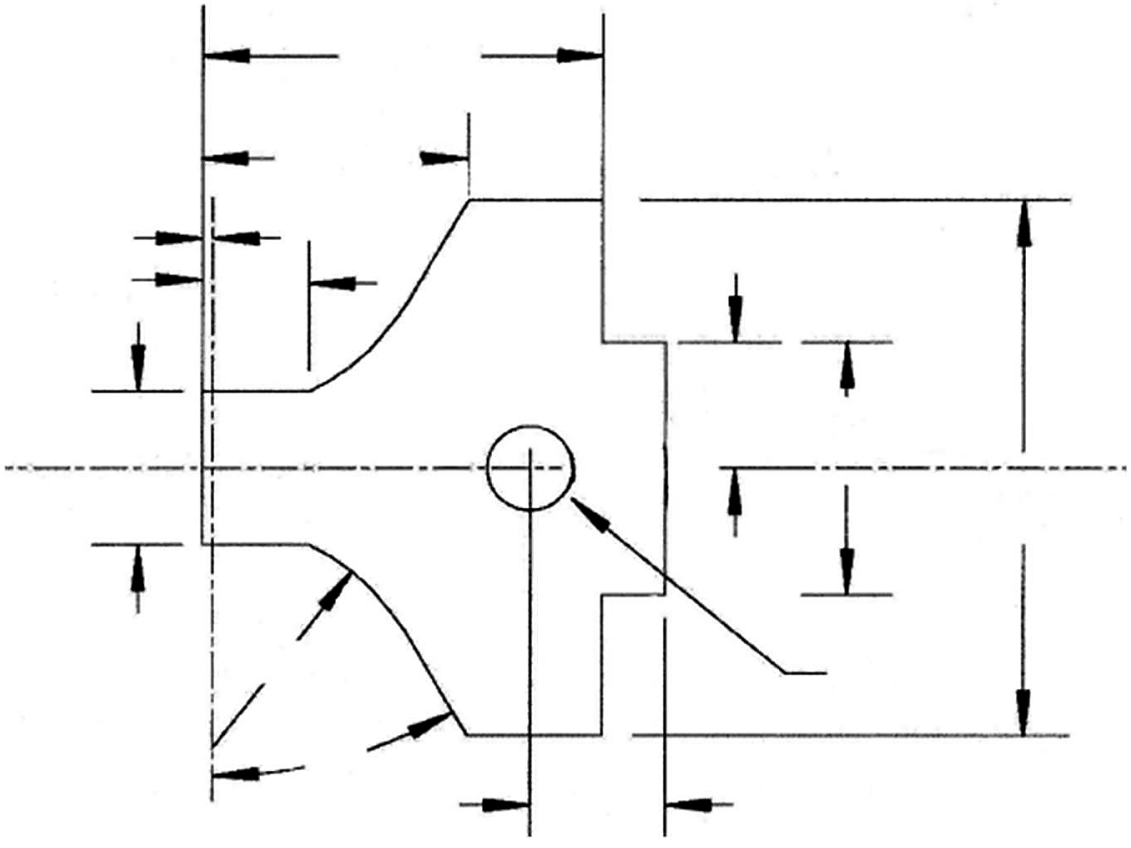

6500 Corporate Drive, Cincinnati, OH 45242 ***Tel:*** *513-530-0064* ***e-mail:*** *info@weldparts.com*

DRESSING TOOL

Description	Item #	Remark
Upper Holder	DP-UH-KM1	For KM1 cutter
Lower Holder	DP-LH-001	-
Holder Shank	DP-HS-13	For 13 diameter
Holder Shank	DP-HS-16	For 16 diameter



Easy Dressing!

Re-dressing is made easier by using Weldparts standard.
Which requires a drill press, reducing cycle time.

CUTTER CASE

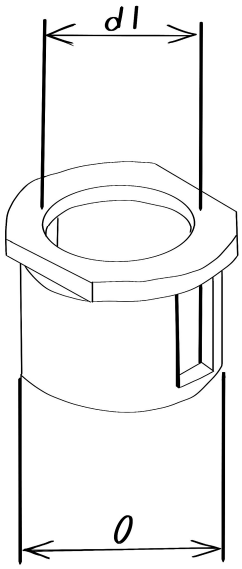

Description	Item #	d1	D
Cutter Case	ETD-0-10	10	24
Cutter Case	ETD-0-12	12	24
Cutter Case	ETD-0-13	13	24
Cutter Case	ETD-0-16	16	24
Cutter Case	ETD-0-18	18	24
Cutter Case	ETD-3-12	12	22
Cutter Case	ETD-3-13	13	22
Cutter Case	ETD-3-16	16	22

**Same size cutter as MMM, Kyokuto, EDI*

6500 Corporate Drive, Cincinnati, OH 45242 ***Tel:*** *513-530-0064* ***e-mail:*** *info@weldparts.com*

Nut & Bolt Feeder

Power	AC220V
Power Frequency	50Hz
Controller Voltage	AC100/DC24V
Input Power	250VA
Power Consumption	About 350VA
Compressed Air	0.3-0.7MPa(depending on the size of the nut)
Vibrating Body Size	250MM (regular)
Vibrating Plate Size	300MM (regular)
Supply Capacity	About 35/minute
Delivery Pipe Length	Standard 2M
Body Color	Ice Gray
Weight	Around 90KG (include feed gun)
Operating Temperature Range	-5~+40℃
Operating Humidity Range	Below 80%RH
Overall Dimensions	Height: 1100mm, Length: 300mm, Width: 650mm







6500 Corporate Drive, Cincinnati, OH 45242 ***Tel:*** *513-530-0064* ***e-mail:*** *info@weldparts.com*

Feeder Composition

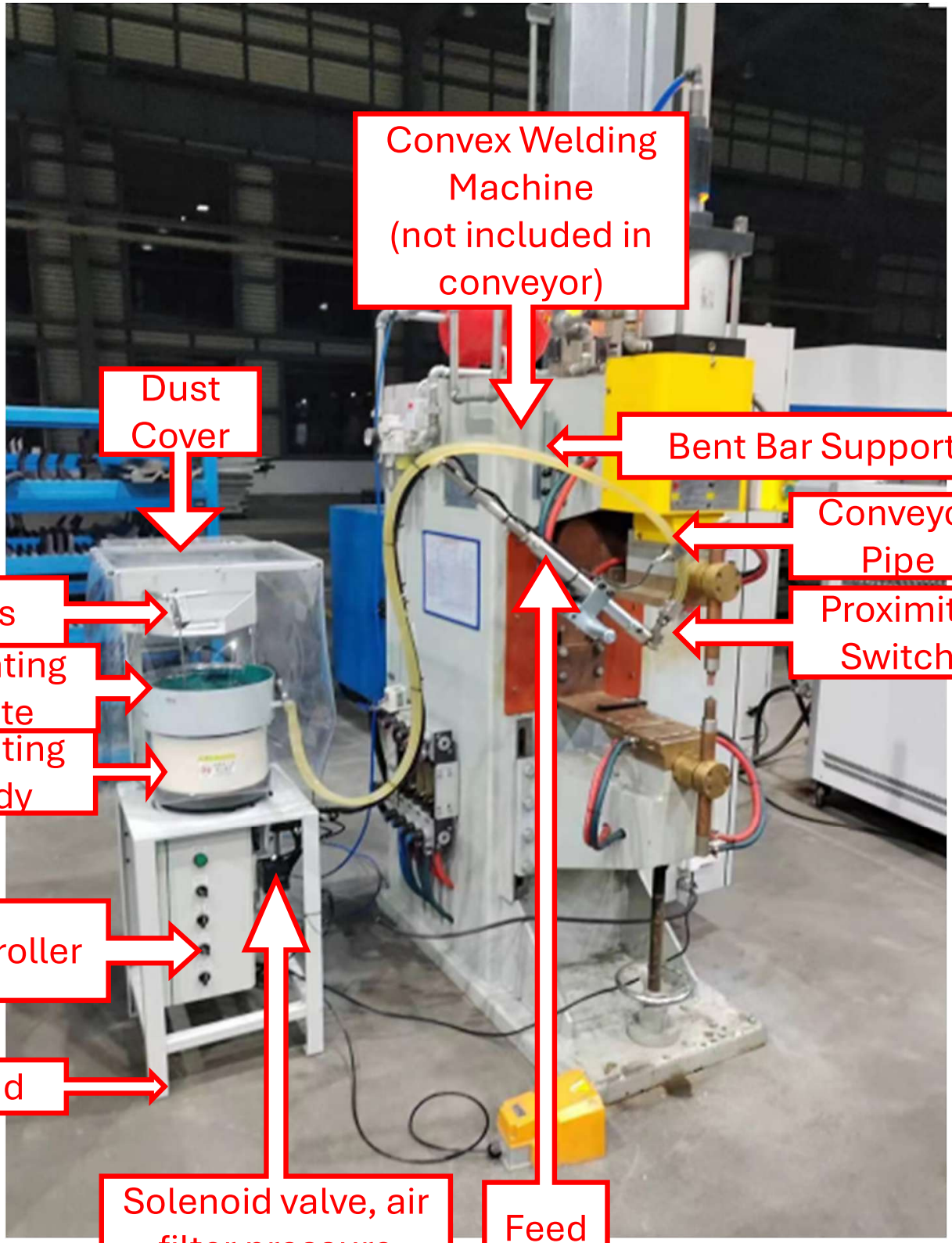

6500 Corporate Drive, Cincinnati, OH 45242 **Tel**: 513-530-0064 **e-mail**: info@weldparts.com

Centralized Tip Dresser



- Automatic Cap Tip Supply – Auto filter by the vibration plate, 600 pcs caps max, inductively start-stop
- Automatic Cap Tip Conveying System
- Auto Length Measure System – Removes caps which length is lower than lifespan - Accurate measurement
- Servo Grinding System – Tungsten steel blades, long lifespan, stable, easy replacement
- Auto Sorting System – Place caps to certain feed bins per different length
- Waste Collection System – Grinded copper goes to waste bin directly
- Control System – Adjust data like sorting length range, speed, vacuum time etc. on touch panel
- Safety System – Safety door locks, installed machine will shut off and alarm when door opens during operation
- High efficiency, Perfect effect – 1 tip can be dressed in 5-8 seconds, 3500-4500pcs could be done in 8 hours

6500 Corporate Drive, Cincinnati, OH 45242 ***Tel:*** *513-530-0064* ***e-mail:*** *info@weldparts.com*

REFORMING OF WELDING GUN HOLDERS

Cost Effective

More than 80% of welding gun holders must be replaced due to taper damage. It is cheaper to reform than to replace the arm or elbow.

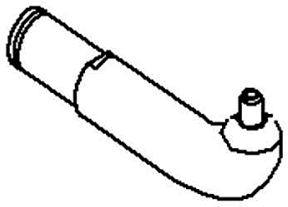

Recyclable

Reforming the holder involves a brazing method.

Reliability

Weldparts, USA utilizes a special hardening heat-treatment and brazes on a new Class 3 tip, resisting deformation and mushrooming better under high force and heat.

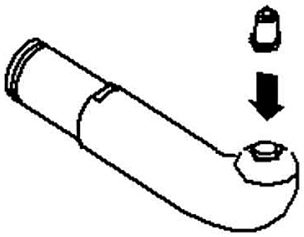

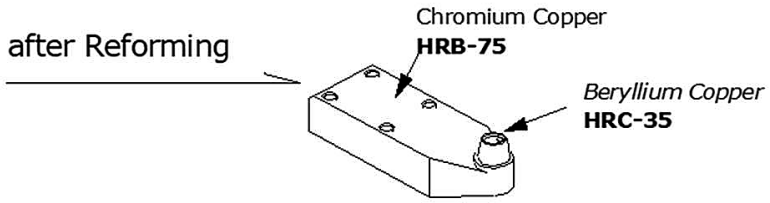

* Holder hardness is like as shown even brazed Class 2 copper and Class 3 copper.

Quality

Class 3 resists pitting and wear from spatter or coatings. The harder alloy keeps the geometry longer, which helps maintain nugget consistency.

6500 Corporate Drive, Cincinnati, OH 45242 ***Tel****: 513-530-0064* ***e-mail****: info@weldparts.com*

Recycling and Reforming

We're excited to let you know about new repair services we're offering to help keep your equipment running smoothly.

Bent Shank/ Gun Arm Recycling

Giving you a reliable and cost-effective way to extend the life of your equipment.

Our goal is to help you minimize downtime while keeping your operations running at peak performance. If you'd like to schedule a repair or learn more, please don't hesitate to reach out.

Thank you for continuing to trust us with your business- we look forward to serving you with these new capabilities.



6500 Corporate Drive, Cincinnati, OH 45242 ***Tel****: 513-530-0064* ***e-mail****: info@weldparts.com*

CAP TIP & UPPER ELECTRODE KEYS

CAP TIP KEY DESCRIPTION

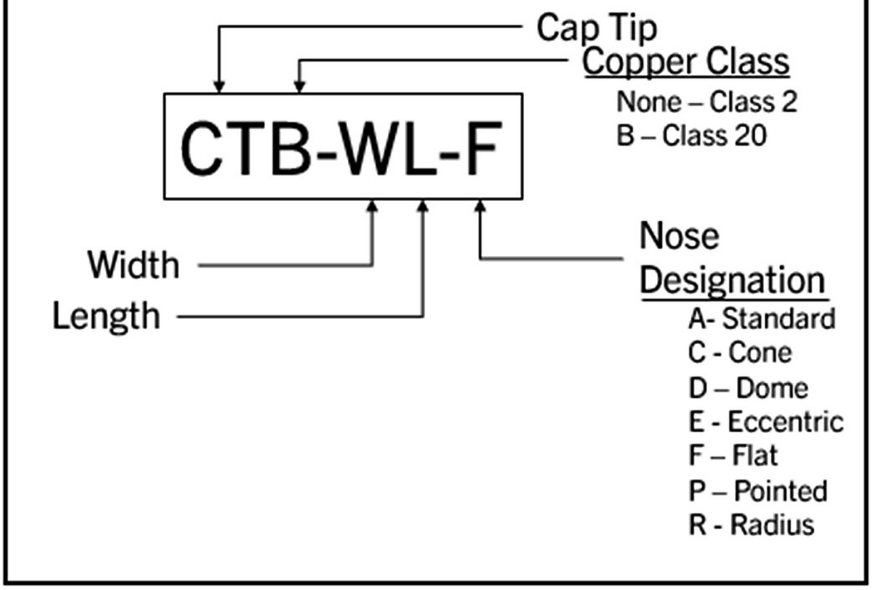

UPPER ELECTRODE KEY DESCRIPTION

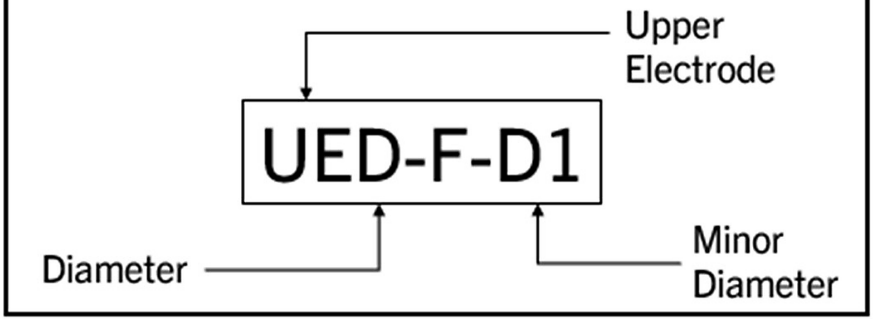

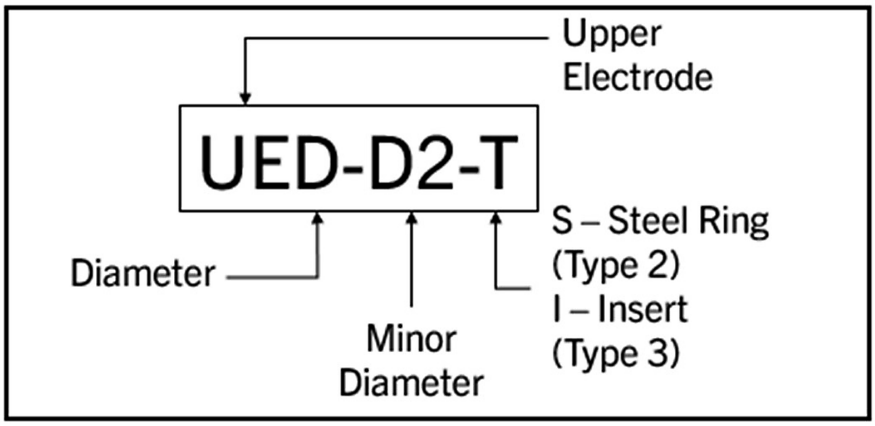

6500 Corporate Drive, Cincinnati, OH 45242 **Tel:** 513-530-0064 **e-mail:** info@weldparts.com

GUIDE PIN KEY DESCRIPTION

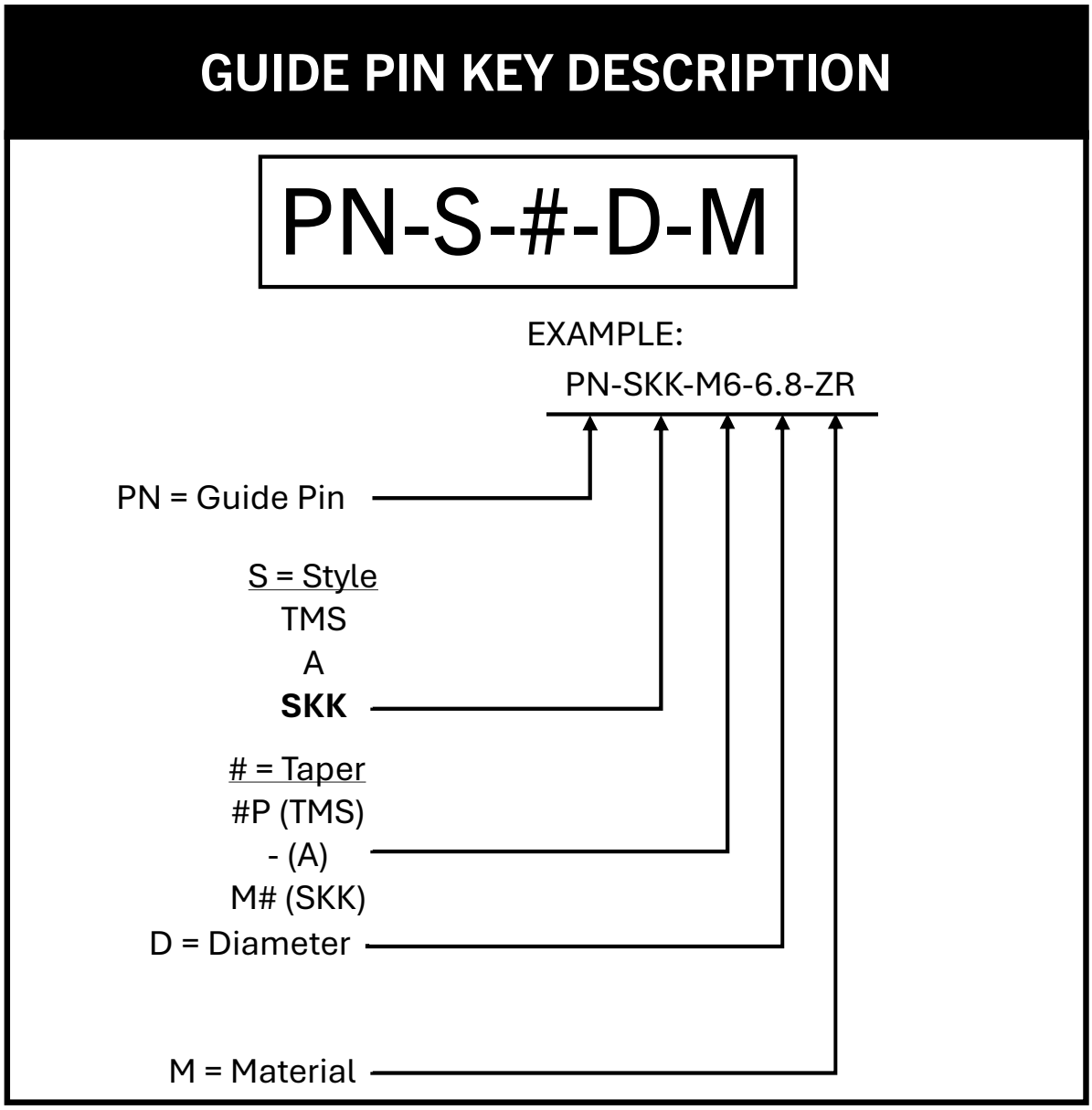

6500 Corporate Drive, Cincinnati, OH 45242 **Tel:** 513-530-0064 **e-mail:** info@weldparts.com

GLOSSARY

IN – INSERT

BT – BASE TIP

KM – CUTTER BLADE

PN – PIN

UE – UPPER ELECTRODE

BL - BAKELITE

LE – LOWER ELECTRODE

EB – ELECTRODE BODY

CT- CAP TIP

PH – POINT HOLDER

WN – WATER NIPPLE

WC – WATER CONNECTOR



6500 Corporate Drive, Cincinnati, OH 45242 ***Tel:*** *513-530-0064* ***e-mail:*** *info@weldparts.com*