WELDPARTS USA

TIP DRESSERS & CUTTERS

PRODUCT CATALOG

Tip dressers & changers 02
Standard, swing arm and centralized systems

Portable tip dressers 08
Pneumatic and electric configurations

Dresser cutters 10
Model numbers and dimensions



Tip dresser lineup



Standard Electric Tip Dresser



Auto Tip Changer and Dresser



Mobile Tip Dresser with Trolley



Pneumatic Swing Arm Tip Dresser

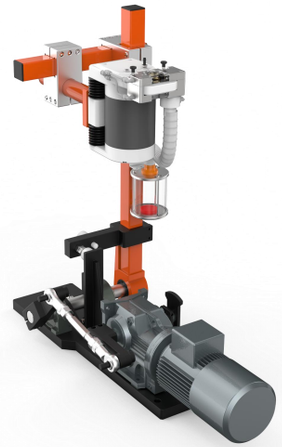

Electric Swing Arm Tip Dresser



Centralized Tip Dresser

Standard electric tip dresser

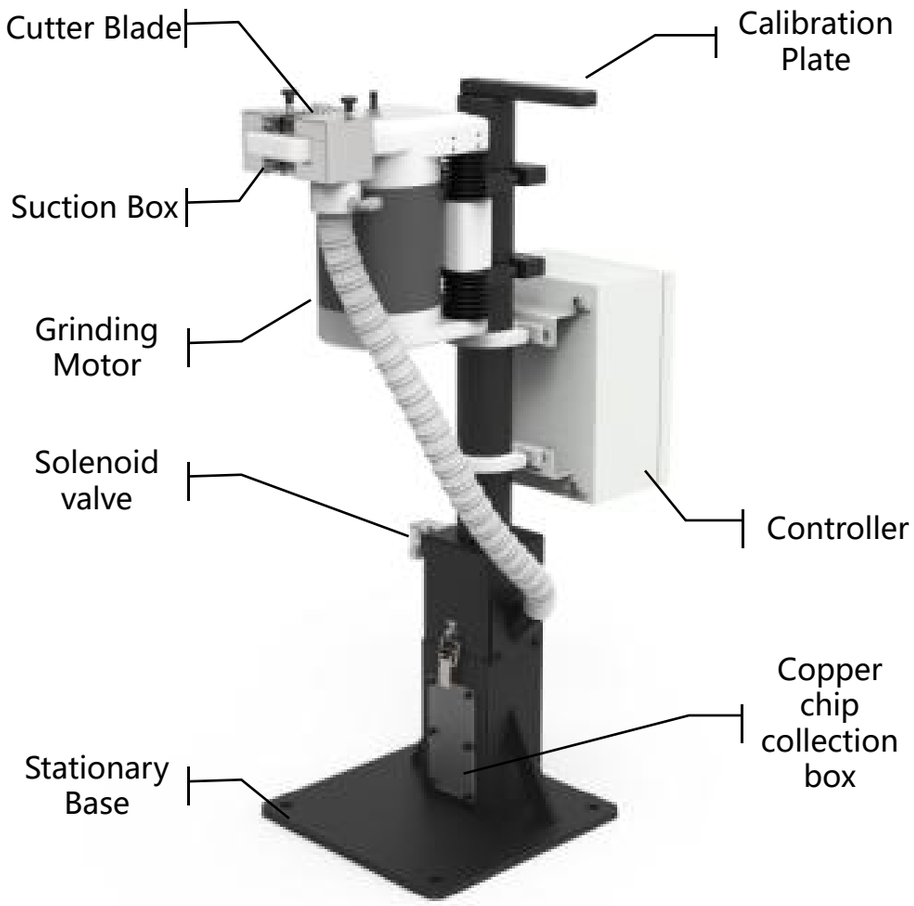

Standard Tip Dresser

The standard tip dresser is mainly used for the grinding work of robot welding guns. The robot holds the welding guns and moves them to the corresponding position for tip dressing.

The standard floating device can automatically adjust the position of the grinding motor within a certain range, effectively absorbing the load of the welding gun and tip dresser with shock reduction.

The unique structure of the dust collection box ensures that the copper chips generated by tip dresser can be sucked into the collection box to avoid spilling to the ground.

Parameter	Description
Measurement	520*300*835 mm
Power	1.0 kW
Voltage	3PH 380V(AC) 50Hz / 3PH 220V(AC) 50Hz （Optional)
Control voltage	1PH 24V(DC)
Communication Protocol	I/O、Profinet、Ethernet/IP、EtherCAT、CC-Link (Optional)
Blades Direction	Horizontal, Vertical (Optional)
Blade Rotation Detection	External sensor switch to confirm rotation function timely (Optional)

Automatic tip changer and dresser

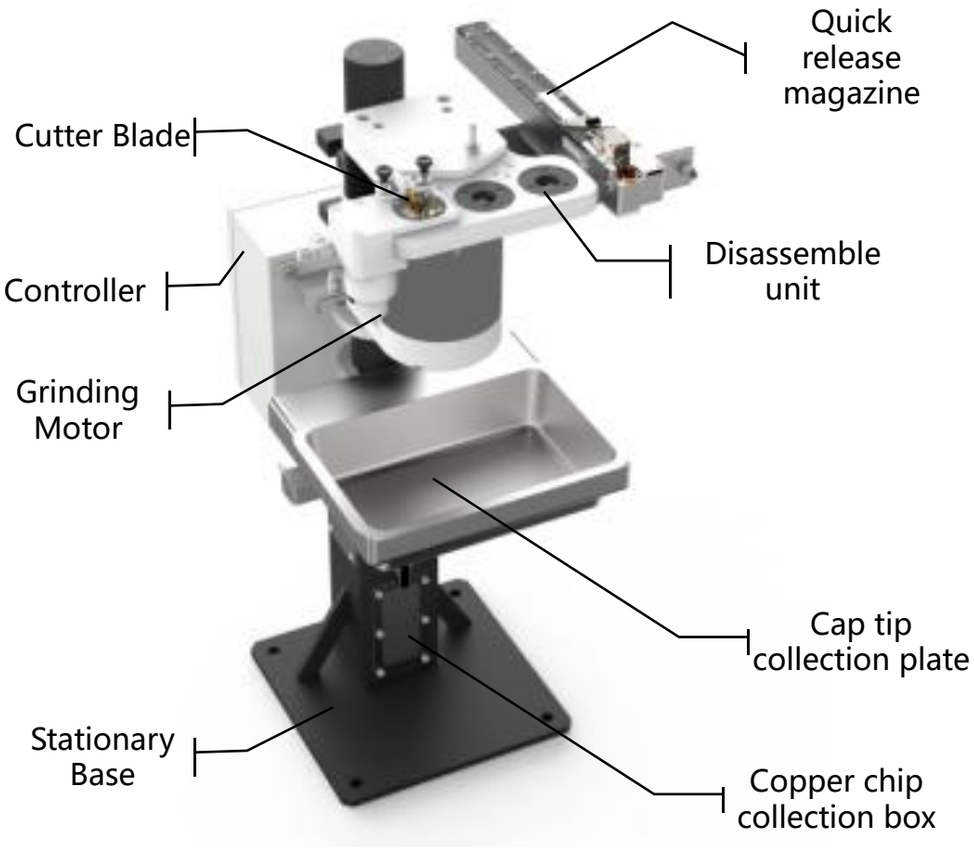

Auto Tip Changer and Dresser

Auto Tip Changer and Dresser consists of a quick release magazine, grinding mechanism, cap replacement mechanism, collection box, etc,.

It doesn't need to change the cap and grinding manually, which greatly improve production efficiency and product quality, while reducing product costs and production safety accidents.

Mainly used for electrode cap tip dressing and replacement in spot welding equipment.

Parameter	Description
Measurement	506*506*840 mm
Power	1.0 kW
Voltage	3PH 380V(AC) 50Hz / 3PH 220V(AC) 50Hz （Optional)
Control voltage	1PH 24V(DC)
Communication Protocol	I/O、Profinet、Ethernet/IP、EtherCAT、CC-Link (Optional)
Blades Direction	Horizontal, Vertical (Optional)
Blade Rotation Detection	External sensor switch to confirm rotation function timely (Optional)

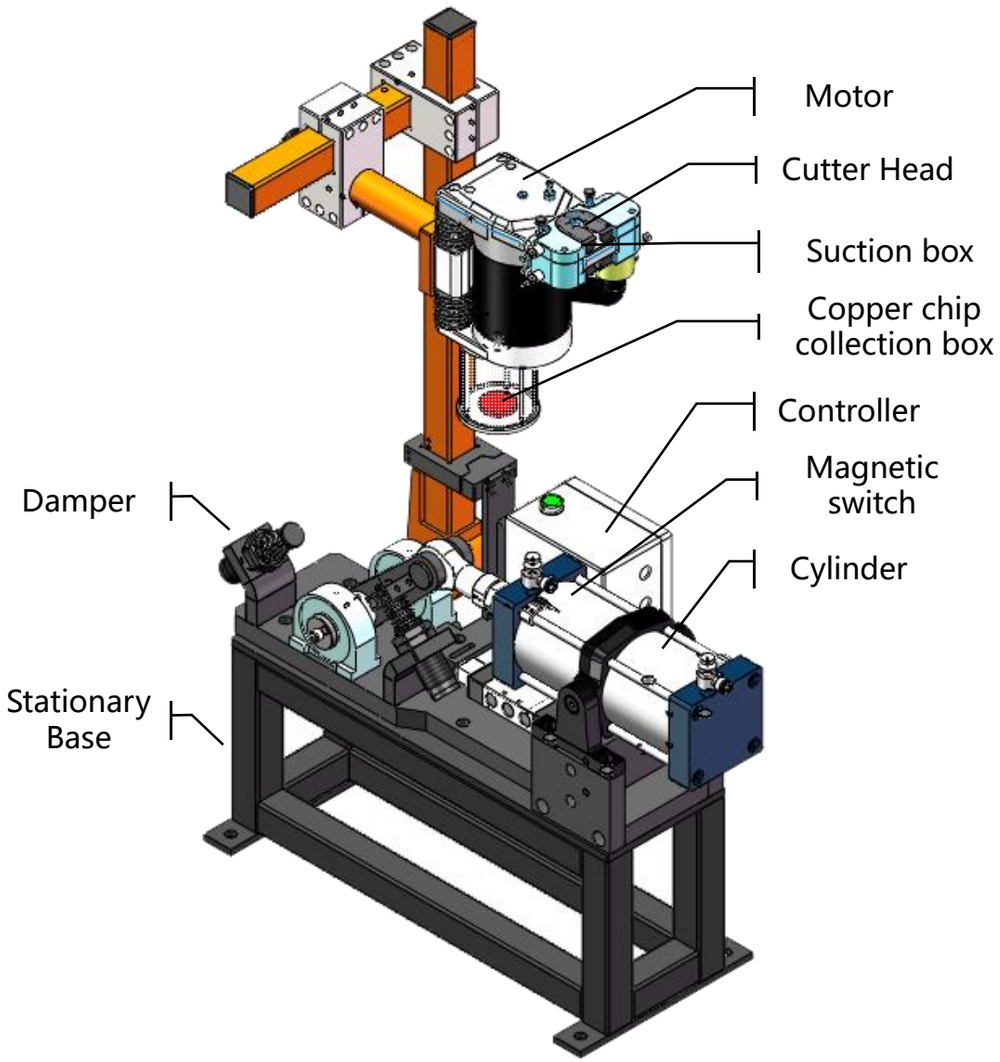

Pneumatic Swing Arm Tip Dresser

Pneumatic swing arm type dresser is mainly used for grinding of stationary welding guns. The grinding motor is driven by the cylinder to move to the position of the static electrode cap of the welding gun, thereby achieving grinding.

The two configured magnetic switches provide real-time feedback to the PLC or robot about the position of the grinding motor, making it easier for the system to control the tip dresser.

The fixed base needs to be customized according to the actual situation of the customer's site.

Parameter	Description
Measurement	520*300*835 mm
Power	1.0 kW
Voltage	3PH 380V(AC) 50Hz / 3PH 220V(AC) 50Hz(Optional)
Control voltage	1PH 24V(DC)
Communication Protocol	I/O、Profinet、Ethernet/IP、EtherCAT、CC-Link (Optional)
Blades Direction	Horizontal, Vertical (Optional)
Blade Rotation Detection	External sensor switch to confirm rotation function timely (Optional)

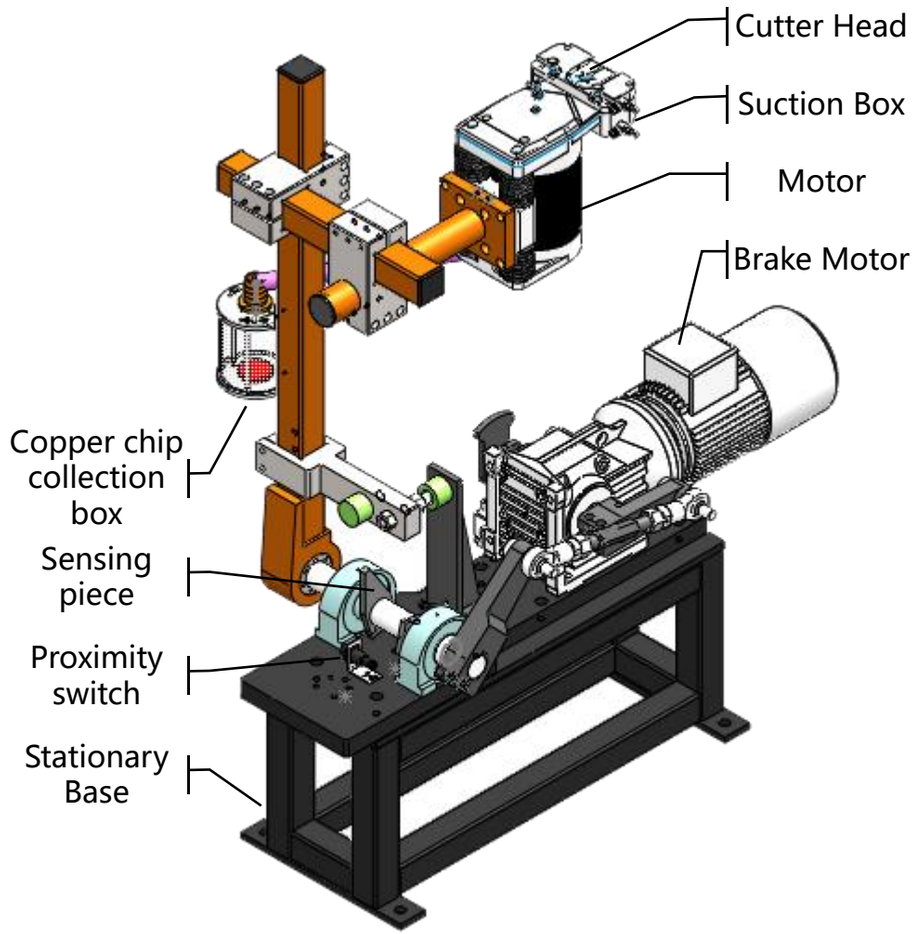

Electric Swing Arm Tip Dresser

Electric swing arm type tip dresser is mainly used for grinding of stationary welding guns. The motor equipped with a braking function drives the grinding motor to move to the position of the electrode cap where the welding gun does not move, thereby achieving grinding.

By adjusting the position of the sensor piece, it can stay at any position.

The fixed base needs to be customized according to the actual situation of the customer's site.

Parameter	Description
Measurement	520*300*835 mm
Power	1.0 kW
Voltage	3PH 380V(AC) 50Hz / 3PH 220V(AC) 50Hz(Optional)
Control voltage	1PH 24V(DC)
Communication Protocol	I/O、Profinet、Ethernet/IP、EtherCAT、CC-Link(Optional)
Blades Direction	Horizontal, Vertical (Optional)
Blade Rotation Detection	External sensor switch to confirm rotation function timely (Optional)

Centralized tip dresser

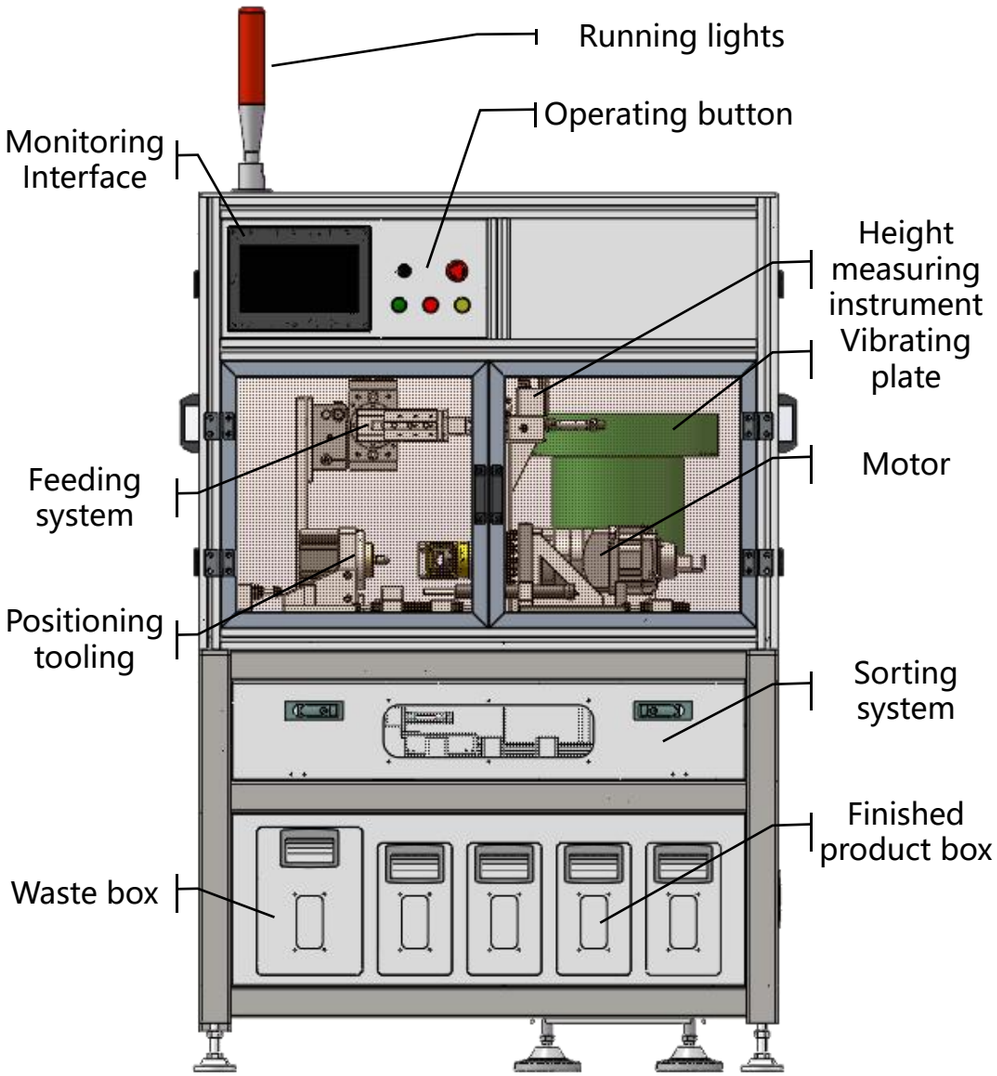

Centralized Tip Dresser

Centralized tip dresser is mainly used for centralized grinding of lots of electrode cap tips, and has both grinding and sorting functions.

The electrode cap tip is automatically loaded through the vibrating plate, and the height measuring instrument measures the height of the electrode cap tip. If it is unqualified, it will be directly rejected. The qualified product will be grabbed by the loading system to the positioning tooling, and the grinding motor will complete the grinding. After grinding, the sorting system automatically sorts the electrode caps into corresponding finished product bins according to the height of the electrode caps.

By changing the positioning tooling, the versatility of electrode caps of different sizes can be achieved.

Parameter	Description
Measurement	1100*890*1670 mm
Voltage/Power	1PH 220V(AC) 50Hz、3.0 kW
Air Pressure	0.6 ~ 0.8Mpa
Applicable specifications	Diamter 13~16mm、Length16~25mm
Production Rate	< 5 seconds/pcs

Pneumatic portable tip dressers



ETD-18A

・No-load revolutions:1300 rpm

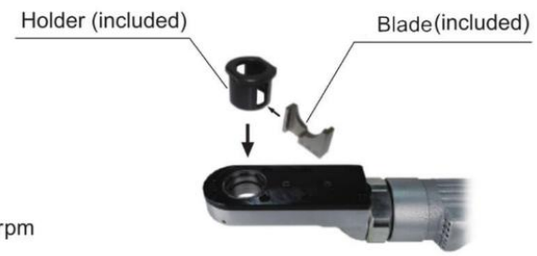



ETD-18F



Example of grinding

Pneumatic Single Side Tip Dresser

Pneumatic Single Side Tip Dresser with Clamp Plate

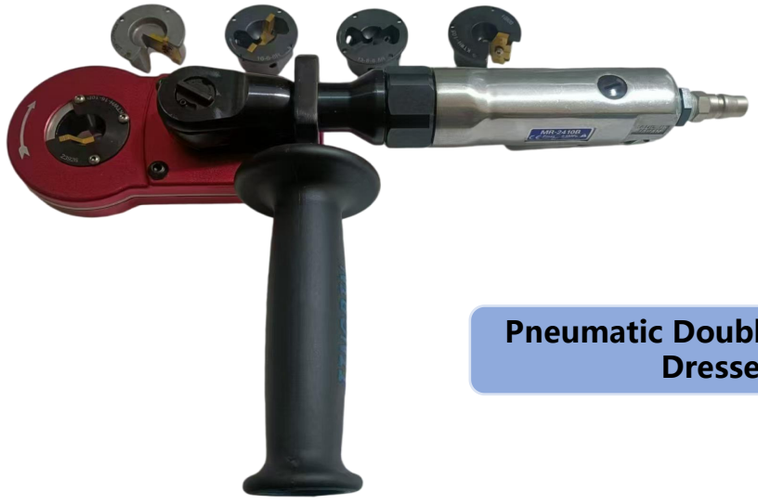

Pneumatic Double-sided Tip Dresser

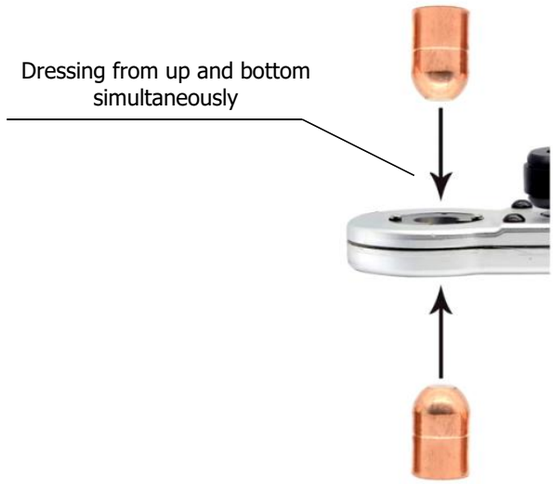

Electric portable tip dressers



Electric Single Side
Tip Dresser



Electric Double-sided
Tip Dresser

Tip dresser cutters



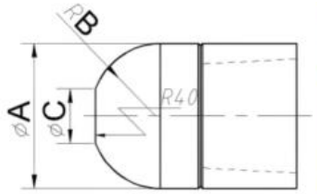

Model No.	A	B	C
KM1-6-6R	12	R6	6
KM1-6-6.5R	13	R6.5	6
KM1-6-8R	16	R8	6
KM1-8-9R	18	R9	8



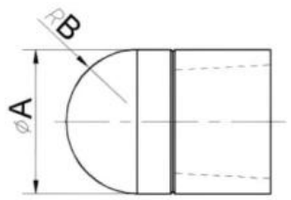

Model No.	A	B
KM1-6R	12	R6
KM1-6.5R	13	R6.5
KM1-8R	16	R8



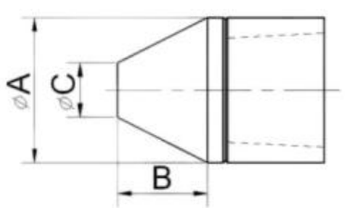

Model No.	A	B	C
KM1-12-6P	12	9	6
KM1-13-6P	13	9	6
KM1-16-6P	16	10	6



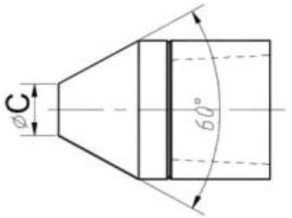

Model No.	C
KM1-6-60°	12



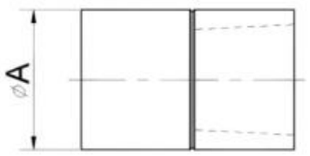

Model No.	A
KM1-12F	12
KM1-13F	13
KM1-16F	16
KM1-18F	18



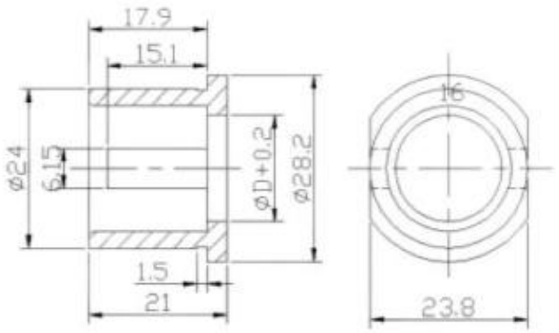

Holder



More blades and holders